ARM Cortex A9 Series

Automotive Box-PC 300, iMX6, 1GHz

PKBA2010 / -1
PKBA2011 / -1
PKBA2012 / -1
PKBA2013 / -1
PKBA2014 / -1
PKBA2015 / -1

Reference User Manual

DELTA COMPONENTS GmbH · Auweg 27 · D-79761 Waldshut-Tiengen · Tel.: +49/7751/8399-0 · Fax: +49/7751/8399-99
www.delta-components.de E-mail: info@delta-components.de

Release Notes

Version	Release Date	Notes	By
1.0	January, 2017	The 1st Release to Customer	
1.1	March, 2017	Add additional features	
1.2	June, 2017	Add GPIO device names Correct LED1 pin assignment	
1.3	November, 2017	Delete keypad (SW1) section	

Disclaimer

This documentation is provided for use with DELTA COMPONENTS products. No license to DELTA COMPONENTS property rights is granted. DELTA COMPONENTS assumes no liability and provides no warranty either expressed or implied relating to the usage or intellectual property right infringement that may result from its use.

DELTA COMPONENTS provides this document “as is,” without warranty of any kind, expressed or implied, including, but not limited to, its particular purpose. DELTA COMPONENTS may make changes to this document without notice.

DELTA COMPONENTS GmbH · Auweg 27 · D-79761 Waldshut-Tiengen · Tel.: +49/7751/8399-0 · Fax: +49/7751/8399-99
www.delta-components.de E-mail: info@delta-components.de

Table of Contents

TABLE OF CONTENTS 3

1 PRECAUTIONS 5

1.1 Safety Precautions 5
1.2 Write Prohibited Regions 6
1.3 Warranty 6

2 PRODUCT FEATURES 7

2.1 Overview 7
2.2 Features and Specifications 8
2.3 Block Diagram 9

3 FUNCTIONAL DESCRIPTIONS 10

3.1 Power Supply and MCU Power ON/OFF 11
3.2 System Power Management 15
3.3 Console and Debug Port 17
3.4 IO Isolation 20
3.5 IO1 (COM/CAN) Connector 21
3.6 IO2 (GPIO) Connector 25
3.7 USB Connectors 29
3.8 GPS Receiver 31
3.9 miniPCIe Connector (for 3G/LTE modem) 32
3.10 WiFi and Bluetooth 33
3.11 G-Sensor & e-Compass 34
3.12 Ethernet 35
3.13 mSATA Connector 36
3.14 Audio (optional) 37
3.15 Unique CPU ID 38
3.16 LED 39
3.17 MicroSD Connector 40
3.18 BM Connectors (Firmware Update) 41
3.19 Other functions 42

4 OUTLINE DRAWING 43

5 ELECTRICAL SPECIFICATIONS 44

DELTA COMPONENTS GmbH · Auweg 27 · D-79761 Waldshut-Tiengen · Tel.: +49/7751/8399-0 · Fax: +49/7751/8399-99
www.delta-components.de E-mail: info@delta-components.de

APPENDIX A: GPIO PHOTO-COUPLER SPEC 45
APPENDIX B: UART/CAN PHOTO-COUPLER SPEC 47
APPENDIX C: DC-IN MATING CONNECTOR SPECIFICATIONS 50
APPENDIX D: DC-IN CONNECTOR SPECIFICATION 51
APPENDIX E: IO2 (GPIO) MATING CONNECTOR SPECIFICATION 52
APPENDIX F: IO2 (GPIO) CONNECTOR SPECIFICATION 53

DELTA COMPONENTS GmbH · Auweg 27 · D-79761 Waldshut-Tiengen · Tel.: +49/7751/8399-0 · Fax: +49/7751/8399-99
www.delta-components.de E-mail: info@delta-components.de

1 Precautions

1.1 Safety Precautions

In order to use this product safely, please take special note of the following precautions.

- Read all product manuals and related documentation before using this product. Use this product correctly and safely. Follow all warnings.
- If operating or extending this product in a manner not described in this manual, please do so at your own risk. Be sure to fully read this manual and other technical information on our website and proceed safely and responsibly.
- Do not install this product in a place with a lot of water, moisture, dust or soot. This could cause product failure, fire, or an electric shock.
- Some parts of this product generate heat and can reach high temperatures. This may cause burns if it is improperly handled. Do not touch the electronic components or surrounding area while powered on or immediately after being turned off.
- Carry out any design and development only after you have thoroughly read and understood this manual and any other related technical materials on the website or in the data sheets. Test your product thoroughly for reliability and safety.
- This product is not intended for applications that require extremely high reliability, safety, functionality and accuracy: including but not limited to medical equipment, traffic control systems, combustion control systems, and safety equipment. This company is not liable for death or injury if used in such systems.
- This product uses semiconductor components designed for generic electronics equipment such as office automation, communications, measurement equipment and machine tools. Foreign noise or a power surge may cause this product to malfunction or fail.
- To ensure there is no risk of bodily harm or property damage, be sure to take all electrical safety precautions such as protection circuits, limit switches, fuse breakers, or redundant systems. Only use the device after sufficient reliability and safety measures are in place.

DELTA COMPONENTS GmbH · Auweg 27 · D-79761 Waldshut-Tiengen · Tel.: +49/7751/8399-0 · Fax: +49/7751/8399-99
www.delta-components.de E-mail: info@delta-components.de

1.2 Write Prohibited Regions

Data stored by the EEPROM, i.MX6 electrical fuse (e-Fuse) is used by the software contained in this product. Do not write to these regions as this may cause the product stop working correctly. Purposely writing to these regions voids the product warranty.

1.3 Warranty

As described in the Product Warranty Policy provided with this product, the main board is covered by a one year replacement warranty starting from the time of purchase. Please note that the other included goods and software are not covered under this warranty. Some knowledge used by DELTA COMPONENTS is provided by third parties, and DELTA COMPONENTS makes no representation or warranty as to the accuracy of such information.

DELTA COMPONENTS GmbH · Auweg 27 · D-79761 Waldshut-Tiengen · Tel.: +49/7751/8399-0 · Fax: +49/7751/8399-99
www.delta-components.de E-mail: info@delta-components.de

2 Product Features

2.1 Overview

The Automotive Box-PC 300 is a communication gateway designed for in-vehicle applications or IOT (Internet of Things) applications. The Automotive Box-PC 300 offers some unique features, including the latest NXP iMX6 (ARM Cortex-A9) quad or dual cores application processor, an LTE modem socket with dual-sim card holder, a ublox GPS receiver, G-sensors, and software controlled power on/off.

With the latest Android/Linux kernel and tools, the Automotive Box-PC 300 allows users to design and deploy custom software for various applications, such as vehicle tracking, fleet management and IOT communication gateway.

The Automotive Box-PC 300 series of products include the following models:

PKBA2010 / -1
Automotive Box-PC 300, iMX6, 1GHz QuadCore
2GB DDR3, 4GB NAND, LAN, GPS, Yocto, WiFi/BT, (optional: OverVoltage Prot.)

PKBA2011 / -1
Automotive Box-PC 300, iMX6, 1GHz QuadCore
2GB DDR3, 4GB NAND, LAN, GPS, Android, WiFi/BT, (optional: OverVoltage Prot.)

PKBA2012 / -1
Automotive Box-PC 300, iMX6, 1GHz DualCore
1GB DDR3, 4GB NAND, LAN, GPS, Yocto, WiFi/BT, (optional: OverVoltage Prot.)

PKBA2013 / -1
Automotive Box-PC 300, iMX6, 1GHz DualCore
1GB DDR3, 4GB NAND, LAN, GPS, Android, WiFi/BT, (optional: OverVoltage Prot.)

PKBA2014 / -1
Automotive Box-PC 300, iMX6, 1GHz SingleCore
1GB DDR3, 4GB NAND, LAN, GPS, Yocto, WiFi/BT, (optional: OverVoltage Prot.)

PKBA2015 / -1
Automotive Box-PC 300, iMX6, 1GHz SingleCore
1GB DDR3, 4GB NAND, LAN, GPS, Android, WiFi/BT, (optional: OverVoltage Prot.)

DELTA COMPONENTS GmbH · Auweg 27 · D-79761 Waldshut-Tiengen · Tel.: +49/7751/8399-0 · Fax: +49/7751/8399-99
www.delta-components.de E-mail: info@delta-components.de

2.2 Features and Specifications

Features

- ARM Cortex processor with Android/Linux enables quick software development
- 9-36V wide input voltage range for vehicle application
- Photo-coupled GPIO for vehicle sensor input monitoring
- Sample OpenGTS server software for remote server demonstration

Hardware Specifications

- NXP iMX6 ARM Cortex™-A9 core @ 1GHz (quad-core, dual-core, single-core)
- 2GB (or 1GB) DDR3 + 4GB eMMC Flash
- 9V-36V DC power input
- **(optional)** Over-voltage protection (at DC input)
- USB 2.0 host port x2 + USB 2.0 OTG port x1 + Micro SD card socket x1
- Ublox GPS receiver x1
- miniPCI-e connector + SIM card holder x2
- 3-Axis G-sensor x1 + E-compass x1
- Isolated RS485 x1 + Isolated RS232 x1 + Isolated CAN bus x 2 + I^2C port x1
- Isolated digital input x 10 + Isolated digital output x 2
- 10/100/1000 Mbps Ethernet (RJ-45) x1
- 802.11a/b/g/n/ac WiFi x1 + Bluetooth 4.2 x1
- mSATA connector x1
- 3G/LTE modem module **(optional)**
- Audio (MIC and Headphone) **(optional)**
- Dimension: 138mm x 204mm x 48mm (L x W x H)

Software Specifications

- Yocto 1.6 (or later)
- Android 6.0 (or later)

DELTA COMPONENTS GmbH · Auweg 27 · D-79761 Waldshut-Tiengen · Tel.: +49/7751/8399-0 · Fax: +49/7751/8399-99
www.delta-components.de E-mail: info@delta-components.de

2.3 Block Diagram

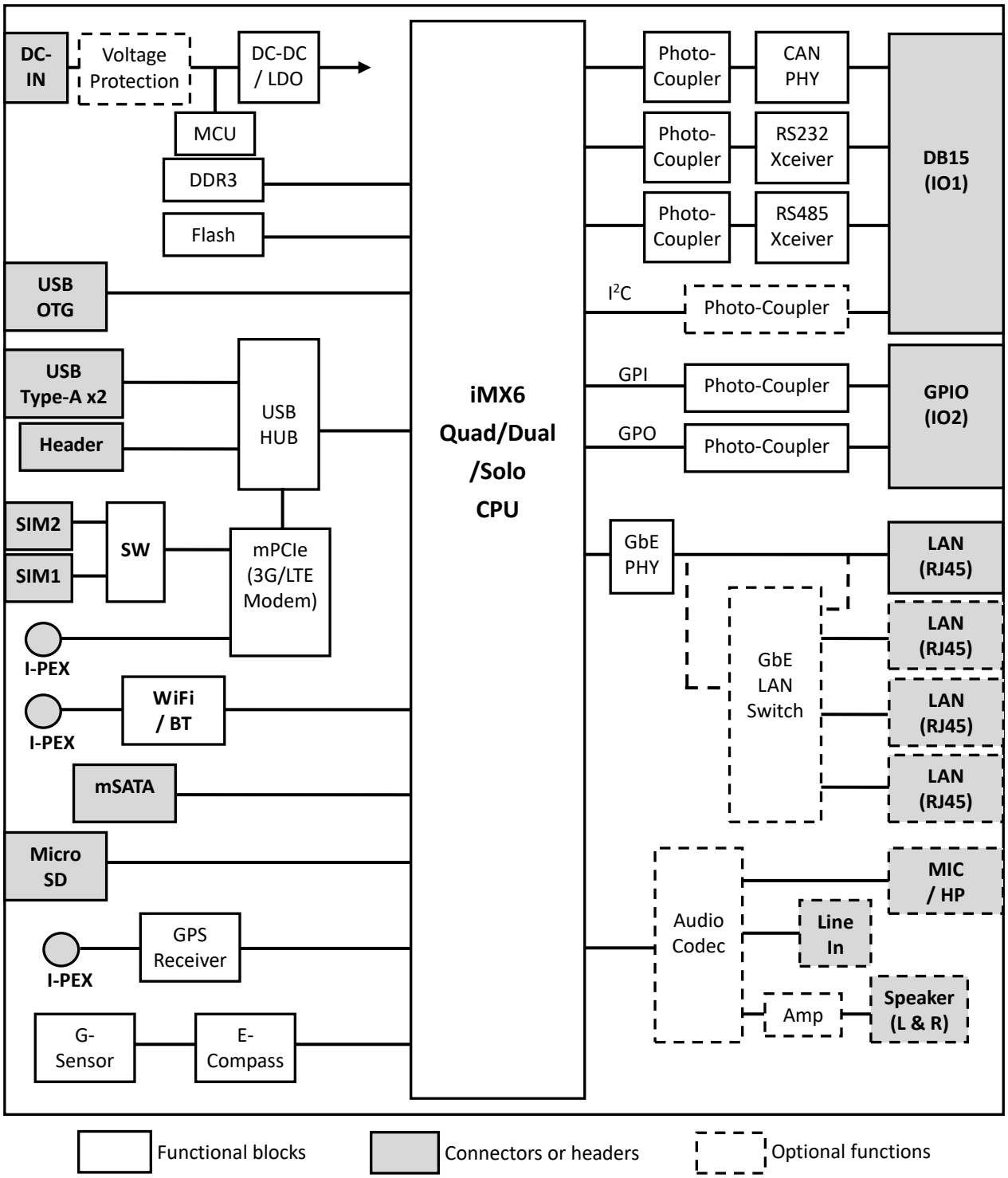

DELTA COMPONENTS GmbH · Auweg 27 · D-79761 Waldshut-Tiengen · Tel.: +49/7751/8399-0 · Fax: +49/7751/8399-99
www.delta-components.de E-mail: info@delta-components.de

3 Functional Descriptions

The following photos and diagrams show connector positions on the Automotive Box-PC 300 series of products. The functional details of the connectors are described in subsequent sections.

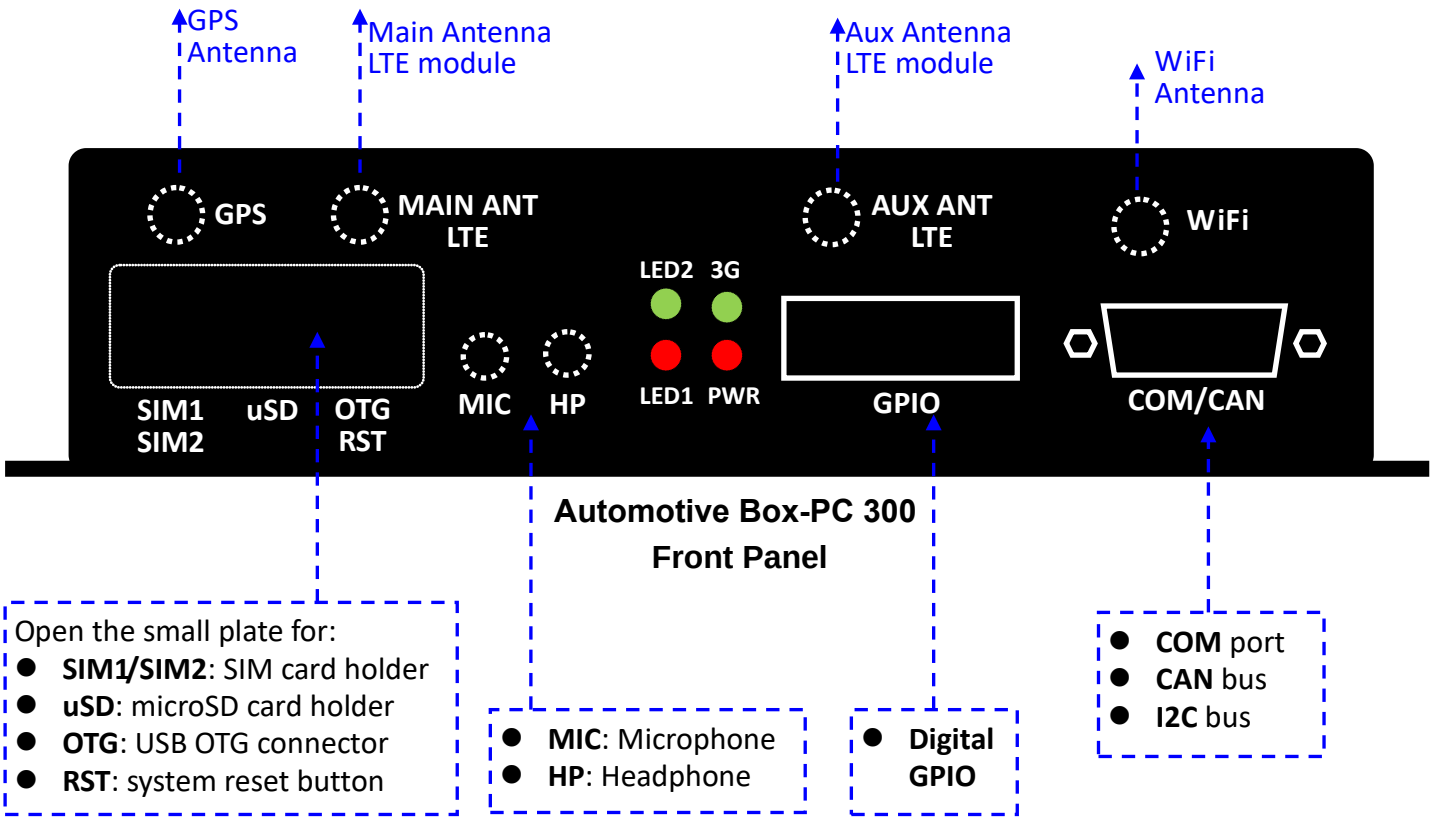

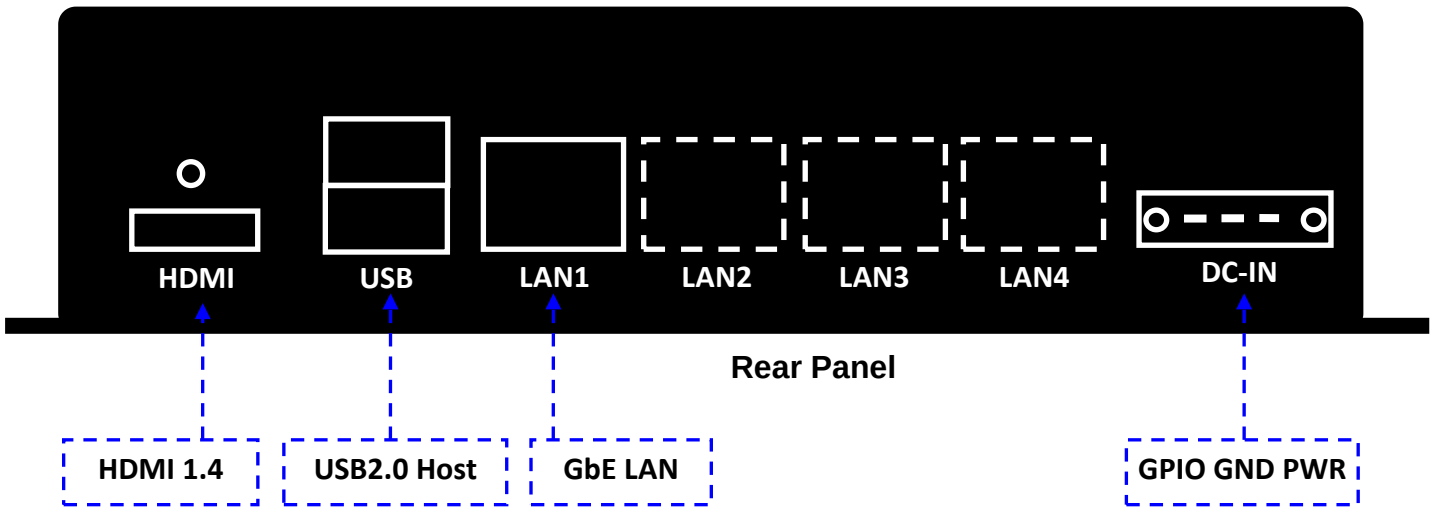

DELTA COMPONENTS GmbH · Auweg 27 · D-79761 Waldshut-Tiengen · Tel.: +49/7751/8399-0 · Fax: +49/7751/8399-99
www.delta-components.de E-mail: info@delta-components.de

3.1 Power Supply and MCU Power ON/OFF

The Automotive Box-PC 300 power input should be applied to the 3-pin DC-IN connector (CN3).
Refer to Appendix C for DC-IN **mating** connector specification.
Refer to Appendix D for DC-IN connector specification.

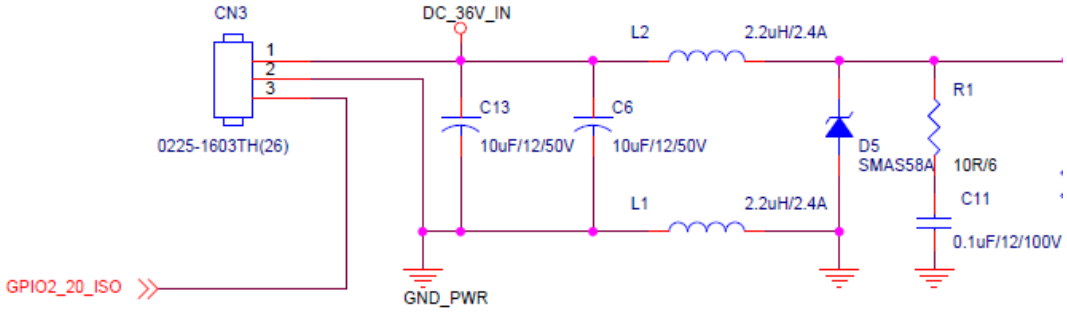

The input voltage can be in the range of DC 9V-36V. An Over-Voltage-Protection circuit (optional function) is implemented to protect Automotive Box-PC 300 from over voltage damage.

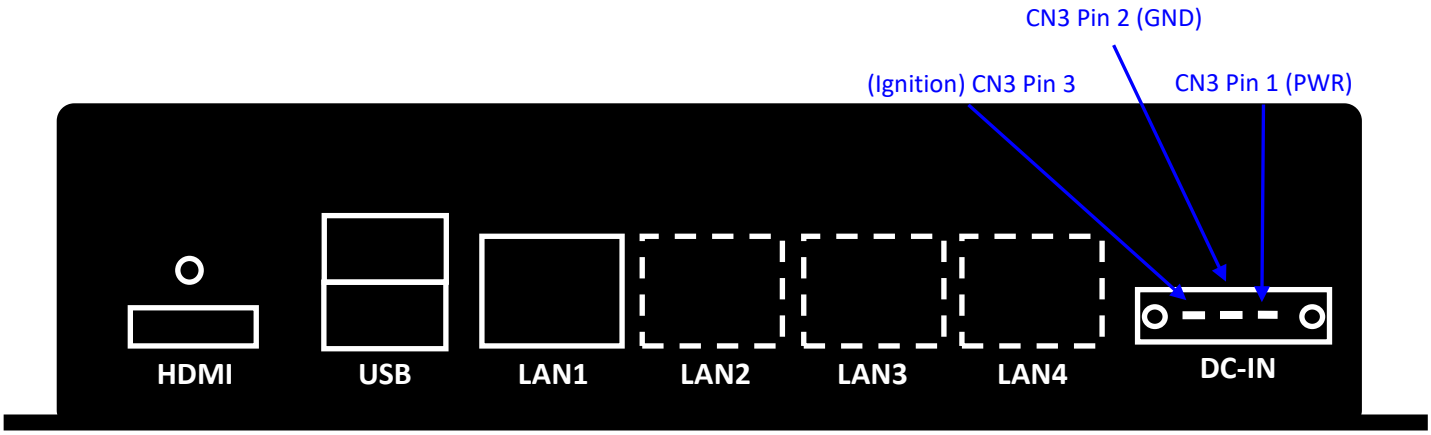

The pin 3 of DC-IN connector is a photo-coupled input (5KV isolation) dedicated for vehicle power ignition signal. The input is connected to Automotive Box-PC 300 power on/off MCU.
If pin 3 is not connected to the ignition switch, it has to be connected to HIGH (+12V) to ensure simulated ignition signal is sent to Automotive Box-PC 300.

Refer to Appendix A for brief specification of the photo-coupler IC.

The input power connection is suggested in the following diagrams:

DELTA COMPONENTS GmbH · Auweg 27 · D-79761 Waldshut-Tiengen · Tel.: +49/7751/8399-0 · Fax: +49/7751/8399-99
www.delta-components.de E-mail: info@delta-components.de

Power Connection 1 – The Automotive Box-PC 300 CN3 pin1/2 are connected to car battery directly and CN3 pin 3 is connected to ignition button.

When Automotive Box-PC 300 MCU detects car ignition on, it will turn on Automotive Box-PC 300 system power. When car ignition signal is off, MCU will inform iMX6 to execute a Linux shutdown command (shutdown –h +xx, where xx is **minute** of delay, and xx can be configured in Automotive Box-PC 300 device manager) and turn off system power. See "MCU-controlled power on/off" descriptions in this section.

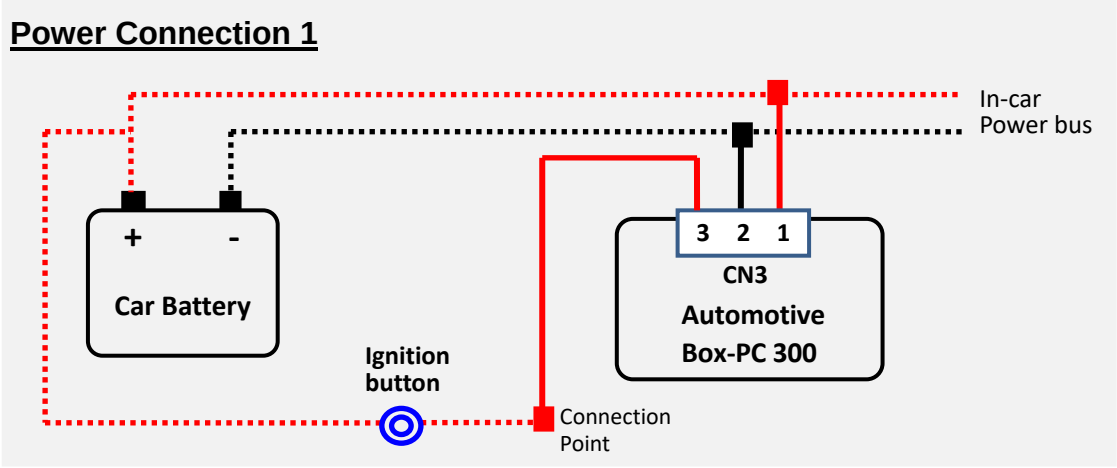

Power Connection 2 – The Automotive Box-PC 300 CN3 pin1/2/3 are connected to car battery direct. This connection will make it **always ON**. Since CN3 pin3 is connected to high, MCU will always detect an ignition signal. Even software executes "shutdown –h now" or "echo 0 > /sys/class/leds/pwr_gpio/brightness" commands (see "MCU-controlled power on/off" descriptions in this section) to turn off system power, MCU will turn on power again in 5 seconds. Such connection is not suggested unless software developer knows when to turn off Automotive Box-PC 300 power.

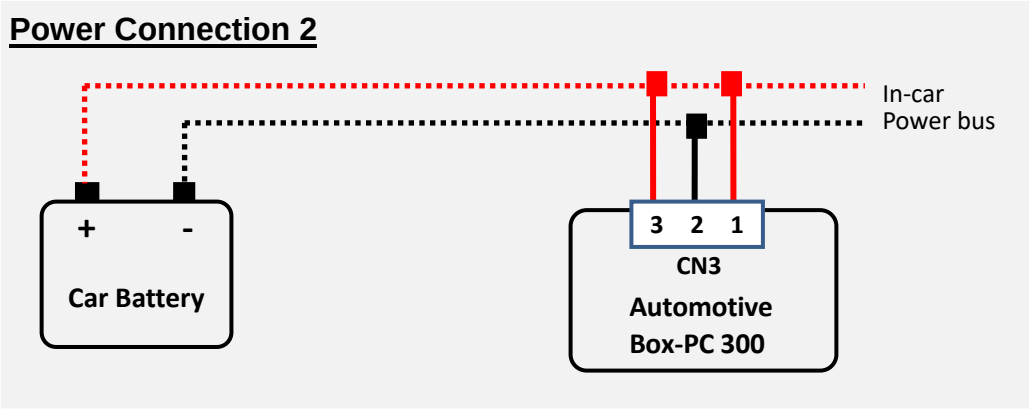

DELTA COMPONENTS GmbH · Auweg 27 · D-79761 Waldshut-Tiengen · Tel.: +49/7751/8399-0 · Fax: +49/7751/8399-99
www.delta-components.de E-mail: info@delta-components.de

Power Connection 3 –
The Automotive Box-PC 300 CN3 pin1/2/3 are connected to a cigarette lighter socket. Since CN3 pin3 is connected to DC input, MCU will always detect an ignition signal as long as car power is on. Even software runs “shutdown –h now” or “echo 0 > /sys/class/leds/pwr_gpio/ brightness” commands (see “MCU-controlled power on/off” descriptions in this section) to turn off system power, MCU will turn on power again in 5 seconds. It can only be turned off when cigarette lighter socket power output is off.

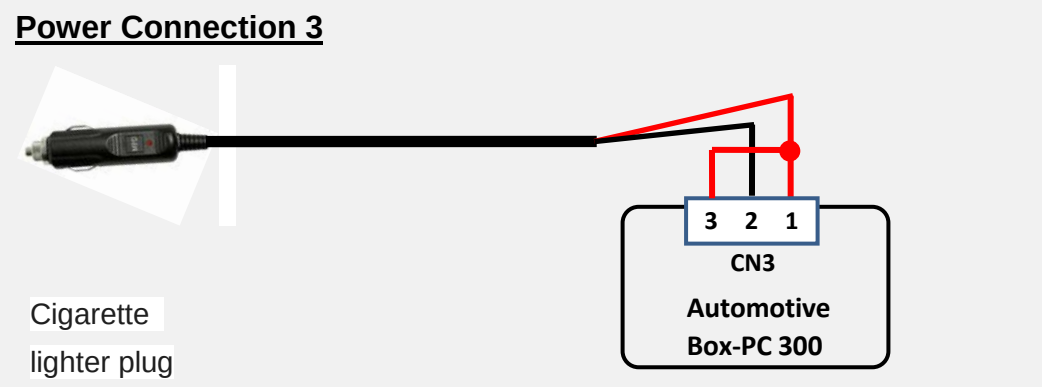

Power Connection 4 – The Automotive Box-PC 300 CN3 pin1/2/3 are connected to a +12V DC power adapter. Since CN3 pin3 is connected to DC input, MCU will always detect an ignition signal as long as DC adapter is on. Even software runs “shutdown –h now” or “echo 0 > /sys/class/leds/pwr_gpio/ brightness” commands (see “MCU-controlled power on/off” descriptions in this section) to turn off system power, MCU will turn on power again in 5 seconds. The Automotive Box-PC 300 can only be turned off when DC power adapter output is off.

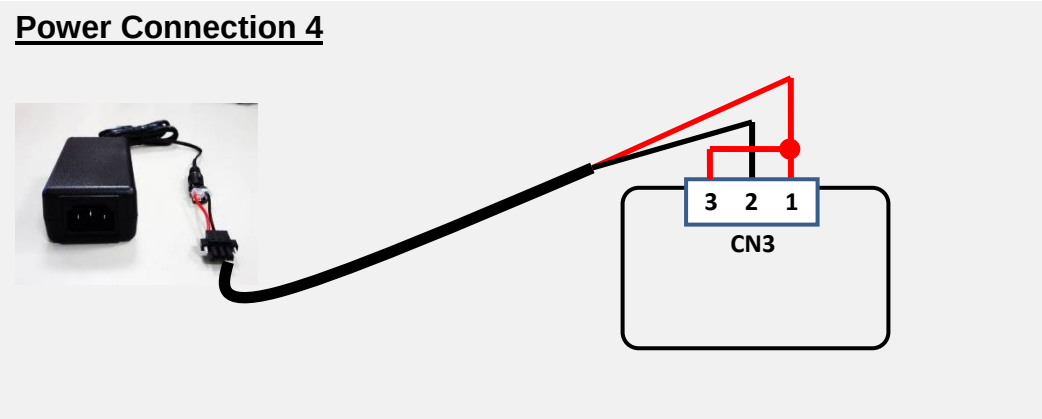

DELTA COMPONENTS GmbH · Auweg 27 · D-79761 Waldshut-Tiengen · Tel.: +49/7751/8399-0 · Fax: +49/7751/8399-99
www.delta-components.de E-mail: info@delta-components.de

MCU-controlled power on/off

The MCU-controlled power on/off allows software to turn off system power by issuing a command (via I^2C channel 1, or GPIO) to the MCU (an 8-bit STM8S MCU).
Automotive Box-PC 300 provides applications (i2creboot and xsignal) in Linux for MCU's action:

```
i2creboot –m 0          // this command will wait until Linux finishes normal
                        // system shutdown and then turn off system power.
i2creboot –d xxx –m 1   // this command will immediately turn off system power and
                        // then turn on system power after xxx seconds, where xxx
                        // is 1 to 65535. This can be used for system reboot (cold start).

echo 0 > /sys/class/leds/pwr_gpio/brightness
// this Linux command uses GPIO to inform MCU to turn off system power immediately
```

The xsignal is a background application persistently monitoring Linux RunLevel.
When Linux executes "reboot" command and RunLevel becomes 6, xsignal will issue command "i2creboot -d 2 -m 1" to turn off power and turn on power after 2 seconds.

When Linux executes "shutdown –h now" command, RunLevel becomes 0, xsignal will issue command "echo 0 > /sys/class/leds/pwr_gpio/brightness" to turn off power immediately.

When the MCU turns off Automotive Box-PC 300 system power, some components are still "ON" to monitor power input. These components include MCU, power regulars, power switches and over-voltage protection circuit (The grey blocks in below diagram). This means a minimum power will be dissipated by these components.

Automotive Box-PC 300

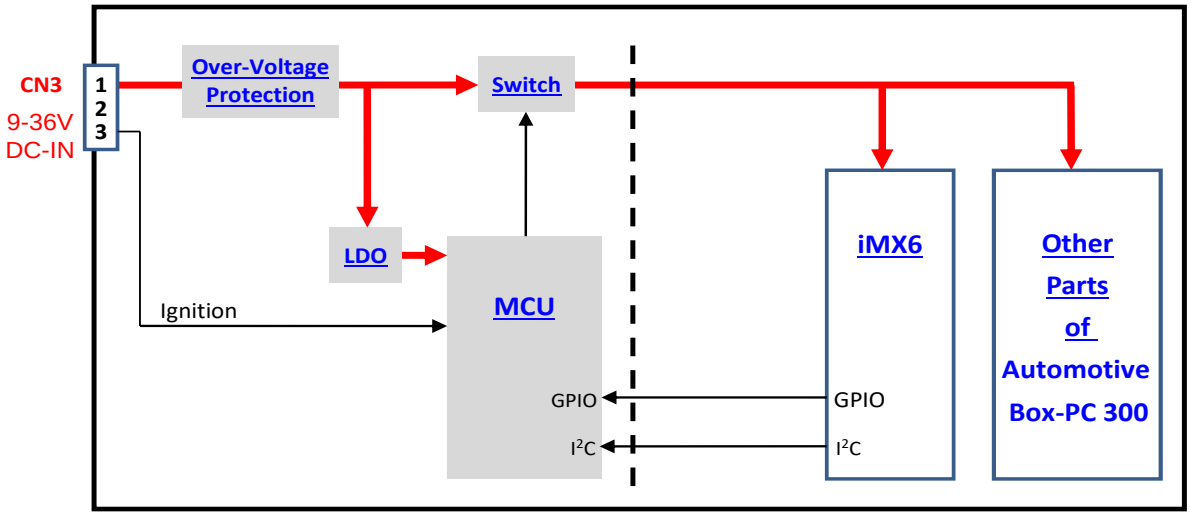

DELTA COMPONENTS GmbH · Auweg 27 · D-79761 Waldshut-Tiengen · Tel.: +49/7751/8399-0 · Fax: +49/7751/8399-99
www.delta-components.de E-mail: info@delta-components.de

3.2 System Power Management

The following diagram shows Automotive Box-PC 300 peripherals power tree. The power supply of peripheral module is with an on/off switch controlled by a GPIO from GPIO expander. The GPIO is used to turn on/off power switch for power saving.

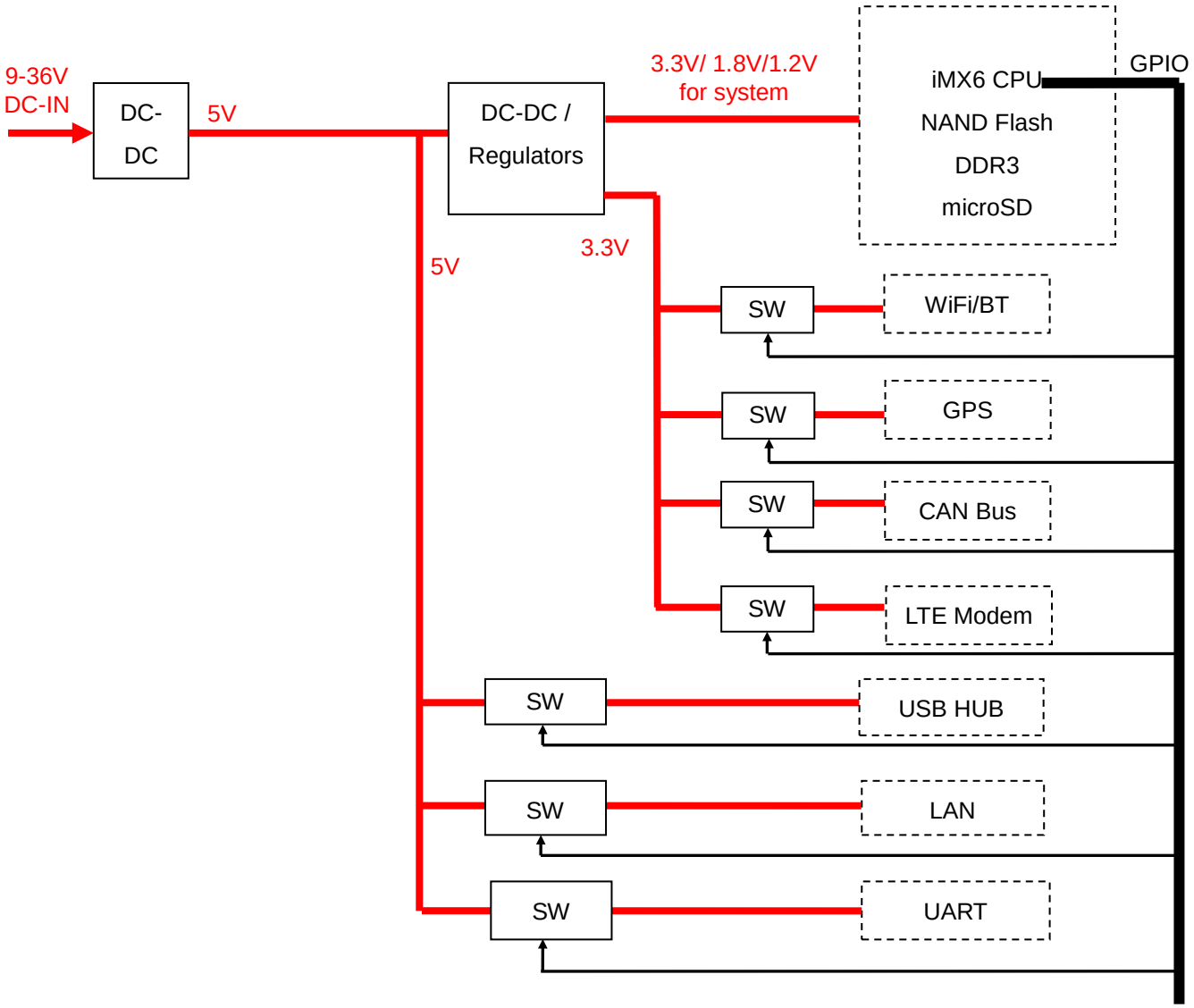

DELTA COMPONENTS GmbH · Auweg 27 · D-79761 Waldshut-Tiengen · Tel.: +49/7751/8399-0 · Fax: +49/7751/8399-99
www.delta-components.de E-mail: info@delta-components.de

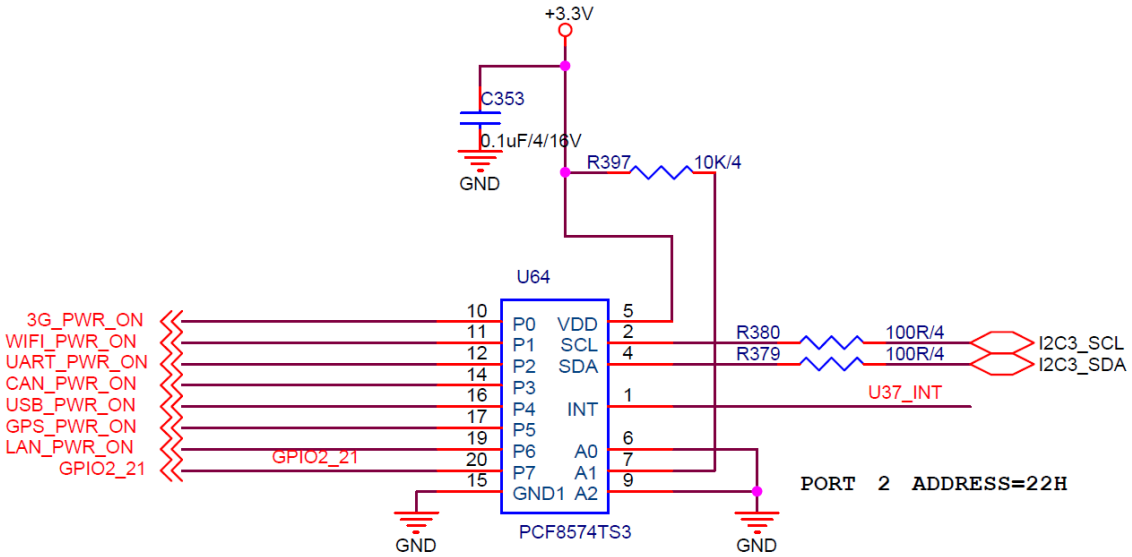

PCF8574 pin (I^2C3 = 22H)	Functions	I/O	Linux Name
3G_PWR_ON	3G/LTE modem power on/off	OUT	/sys/class/gpio/gpio240
WIFI_PWR_ON	WiFi/Bluetooth power on/off	OUT	/sys/class/gpio/gpio241
UART_PWR_ON	COM2/COM3 power on/off	OUT	/sys/class/gpio/gpio242
CAN_PWR_ON	CAN bus power on/off	OUT	/sys/class/gpio/gpio243
USB_PWR_ON	USB HUB power on/off	OUT	/sys/class/gpio/gpio244
GPS_PWR_ON	GPS module power on/off	OUT	/sys/class/gpio/gpio245
LAN_PWR_ON	LAN port power on/off	OUT	/sys/class/gpio/gpio246
GPIO2_21	Connect to IO2 connector (pin 18) via photo-coupler	IN	/sys/class/gpio/gpio247

There is limitation on using GPIO to turn on/off peripherals power supply. Incorrect use of GPIO could result to malfunction of peripherals or unstable system.
Please contact us for information on using the GPIOs.

DELTA COMPONENTS GmbH · Auweg 27 · D-79761 Waldshut-Tiengen · Tel.: +49/7751/8399-0 · Fax: +49/7751/8399-99
www.delta-components.de E-mail: info@delta-components.de

3.3 Console and Debug Port

The console port (or debug port) is located inside Automotive Box-PC 300 box (CN21 of Automotive Box-PC 100 PCBA).

Follow steps below to setup console port:

- Find CN21 console port connector on Automotive Box-PC 100 PCB.

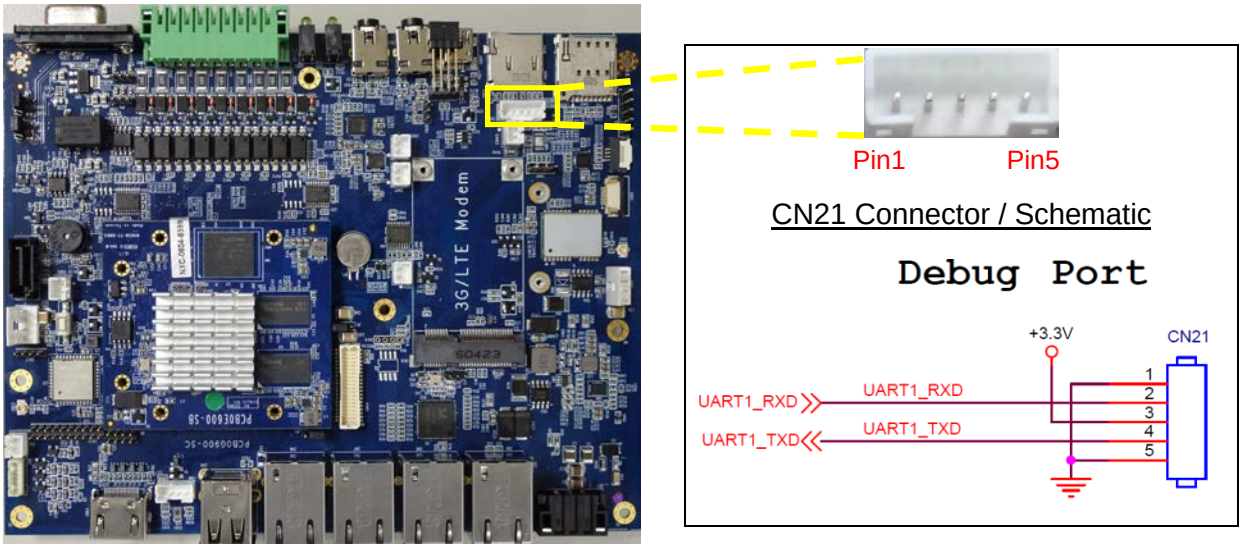

- Make sure you have C220 debug board and cable. Note that C220 board is not part of the Automotive Box-PC 300 product. It has to be purchased separately.
- Connect C220 debug board cable to Automotive Box-PC 300 PCB CN21.

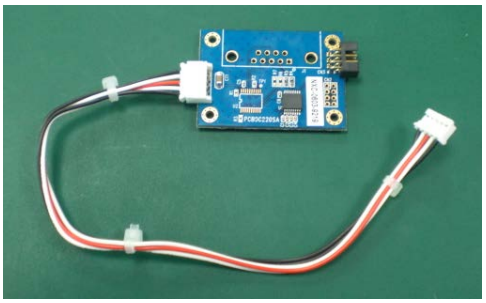

- Connect the RS232 IDC cable to C220 debug board 2x4 box header (black connector):

DELTA COMPONENTS GmbH · Auweg 27 · D-79761 Waldshut-Tiengen · Tel.: +49/7751/8399-0 · Fax: +49/7751/8399-99
www.delta-components.de E-mail: info@delta-components.de

- A DB9 **null modem cable** (or adapter) is required when you want to connect console port to a PC with terminal emulation software such as TeraTerm.

- Turn on PC, run the terminal emulation program (e.g. ***TeraTerm***), and open TeraTerm COM port.

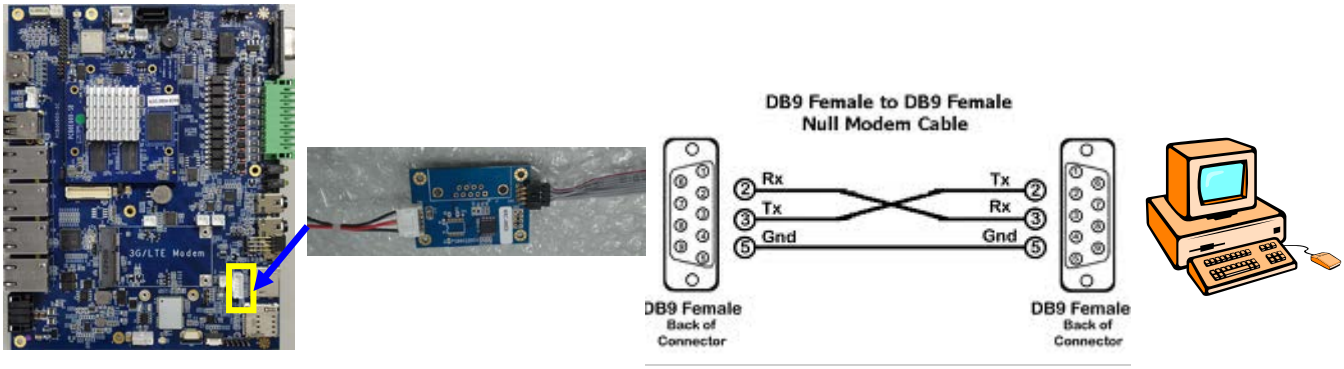

- Set COM port at **Baud Rate 115200, 8 data bits, no parity, 1 stop bit and no flow control**.

- After the above connection/setting, you will see Linux console prompt "$" in the PC TeraTerm.

Pin Assignment: RS232 IDC Cable and Null Modem Adapter

- Console box header (CN3 on C220 board) pin assignment

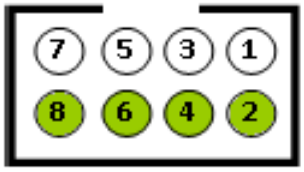

2 : CTS 6 : Tx
4 : Rx 8 : RTS

- RS232 IDC cable: pin header for DB9

DELTA COMPONENTS GmbH · Auweg 27 · D-79761 Waldshut-Tiengen · Tel.: +49/7751/8399-0 · Fax: +49/7751/8399-99
www.delta-components.de E-mail: info@delta-components.de

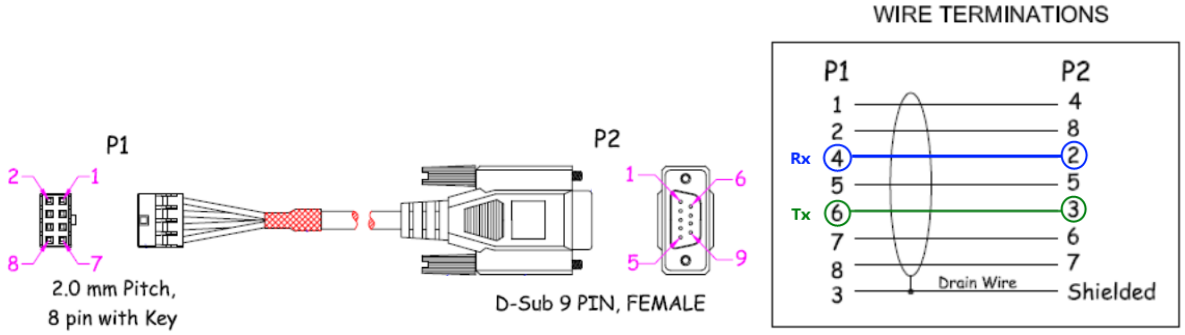

- Null modem adapter: male-to-male for DB9

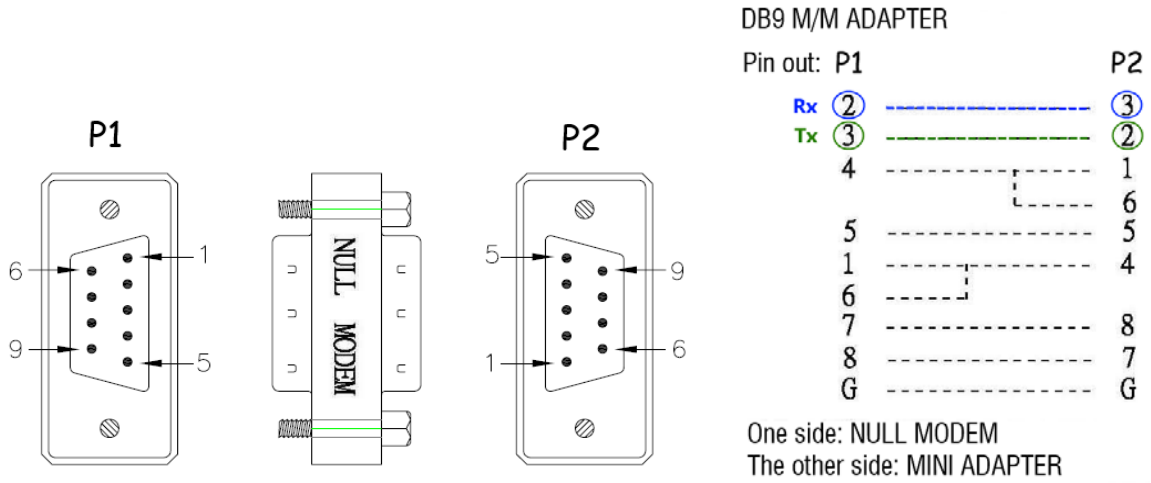

DELTA COMPONENTS GmbH · Auweg 27 · D-79761 Waldshut-Tiengen · Tel.: +49/7751/8399-0 · Fax: +49/7751/8399-99
www.delta-components.de E-mail: info@delta-components.de

3.4 IO Isolation

The Automotive Box-PC 300 IO isolation includes:

- 1.5KV power isolation
- 3.75KV signal isolation on RS232, RS485, CAN1 and CAN2 bus
- 5KV signal isolation on GPIO pin
- 2.5KV signal isolation on I^2C bus (**option**)

Note: I^2C bus is **NOT** isolated. The I^2C isolation is available as an option function.

Automotive Box-PC 300

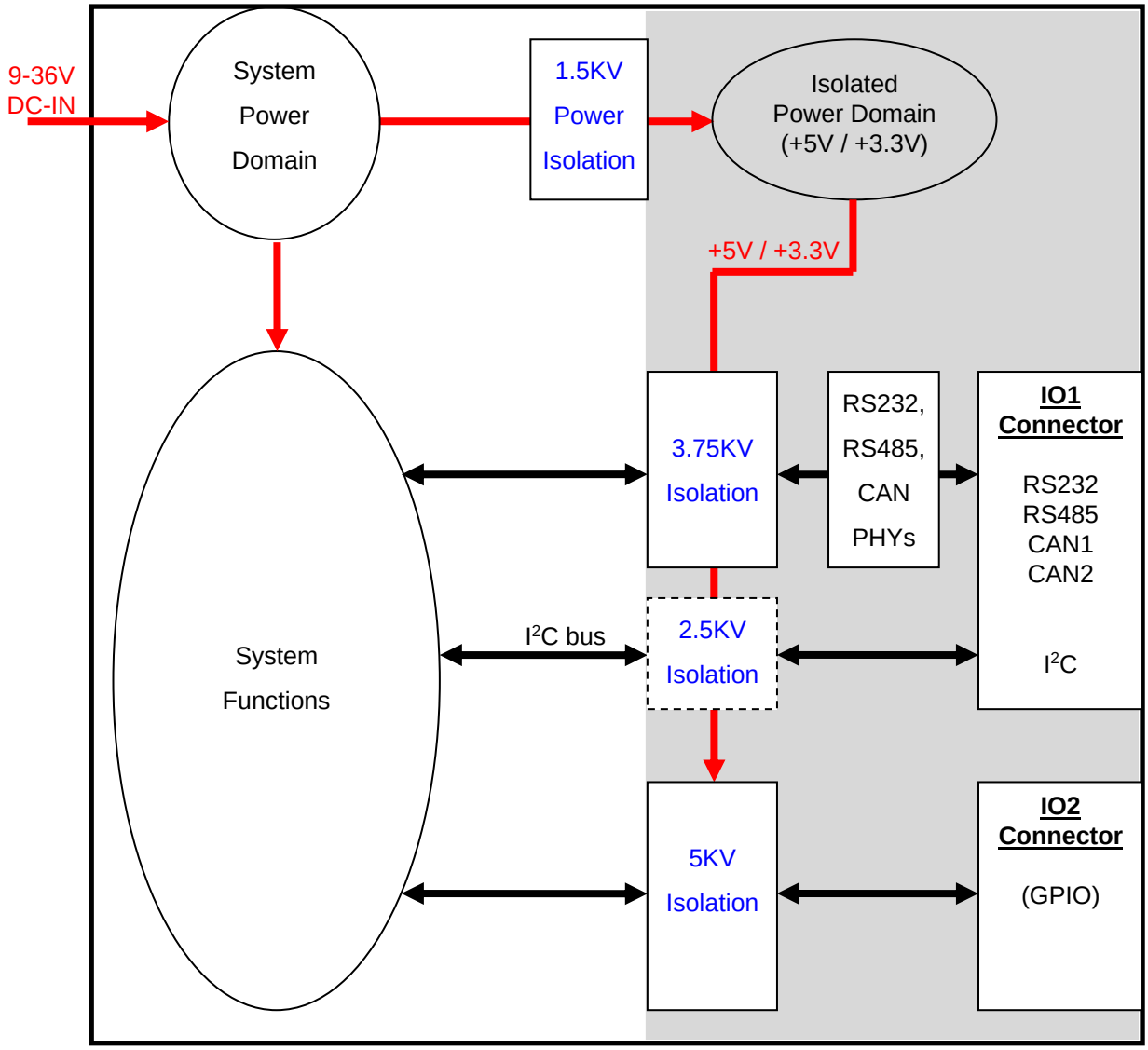

DELTA COMPONENTS GmbH · Auweg 27 · D-79761 Waldshut-Tiengen · Tel.: +49/7751/8399-0 · Fax: +49/7751/8399-99
www.delta-components.de E-mail: info@delta-components.de

3.5 IO1 (COM/CAN) Connector

The IO1 connector is a DB15 female connector at the rear side of Automotive Box-PC 300 box. The COM2 (Linux device: /dev/ttymxc1), COM3 (Linux device: /dev/ttymxc2), CAN1 (Linux device: can0) and CAN2 (Linux device: can1) are with power and signal isolation, while I^2C bus isolation is an option. Refer to Section 3.5 for more information about isolation.

The schematic IO1 connector:

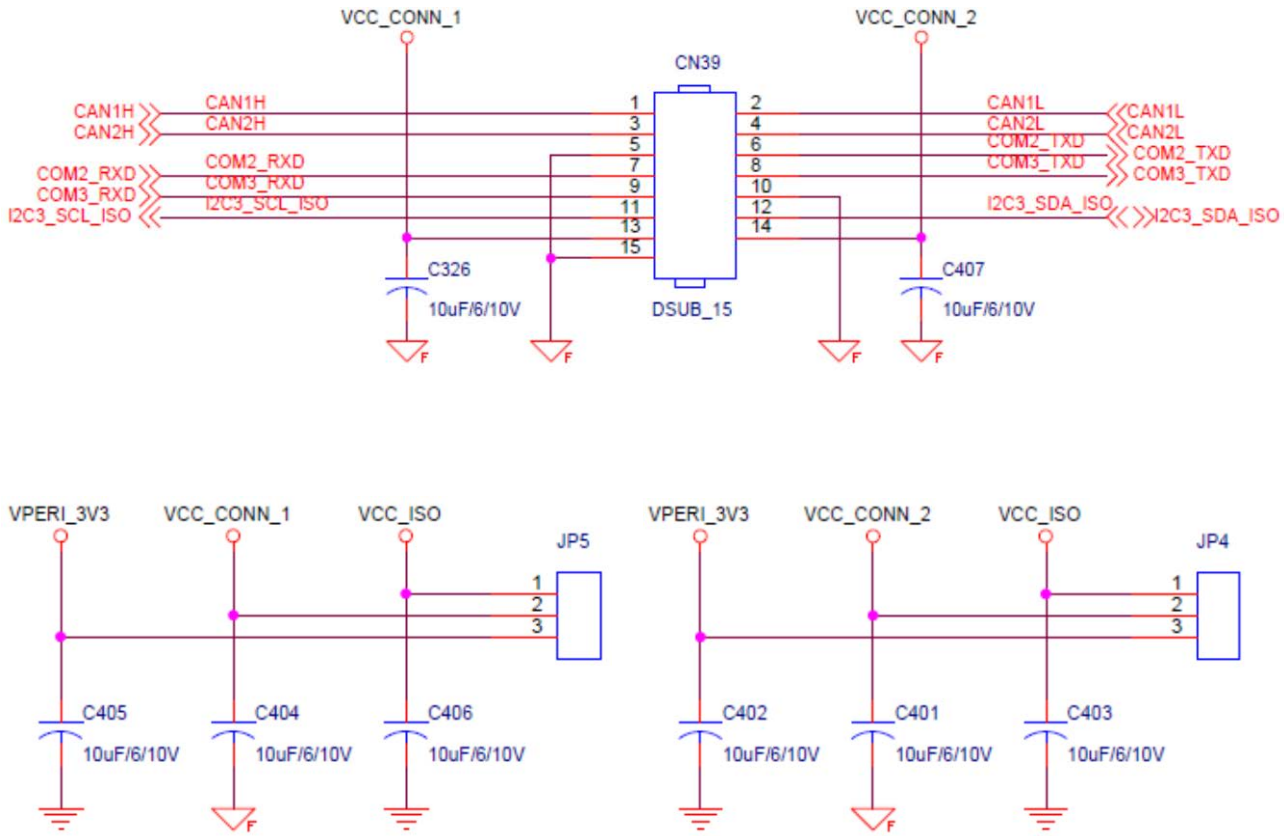

DELTA COMPONENTS GmbH · Auweg 27 · D-79761 Waldshut-Tiengen · Tel.: +49/7751/8399-0 · Fax: +49/7751/8399-99
www.delta-components.de E-mail: info@delta-components.de

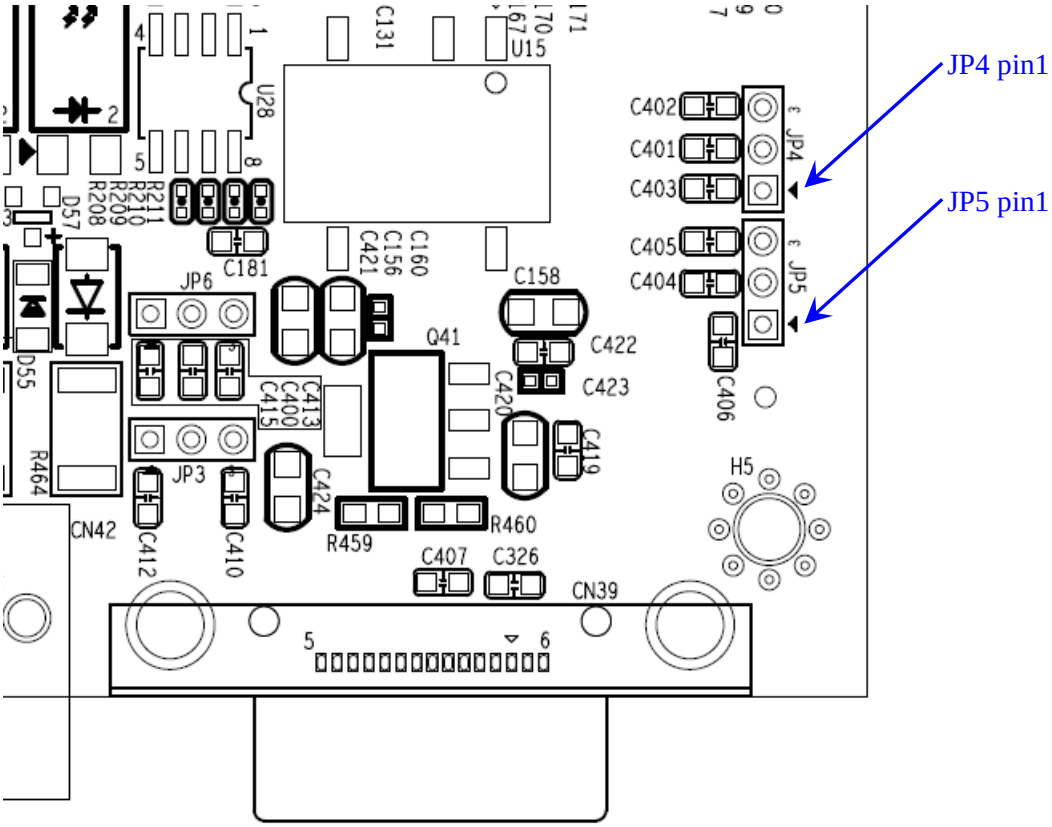

2x CAN2.0B bus interfaces, 2x COM port (RS232/ RS485), I^{2}C bus and power pins are available on the IO1 connector. On the standard Automotive Box-PC 300 hardware, COM2 is configured as RS232 and COM3 is configured as RS485 port. Both COM2 and COM3 can be configured as either RS232 or RS485 port (on ordering Automotive Box-PC 300 products).

Functions	Pin	Signals	Linux Device	Notes	Isolation
CAN1	1 2	CAN1H CAN1L	can0	CAN 2.0B protocol	Y
CAN2	3 4	CAN2H CAN2L	can1	CAN 2.0B protocol	Y
COM2 (RS232)	6 7	TXD RXD	/dev/ttymxc1	COM2_TXD = 485- COM2_RXD = 485+	Y
COM3 (RS485)	8 9	485- 485+	/dev/ttymxc2	COM3_RXD = 485- COM3_TXD = 485+	Y
I^{2}C Bus	11 12	SCL SDA	--	--	(option)
PWR	13 14	3.3V/5V	--	3.3V/5V configured by JP4 and JP5 (default +5V)	Y

DELTA COMPONENTS GmbH · Auweg 27 · D-79761 Waldshut-Tiengen · Tel.: +49/7751/8399-0 · Fax: +49/7751/8399-99
www.delta-components.de E-mail: info@delta-components.de

Schematic of CAN bus

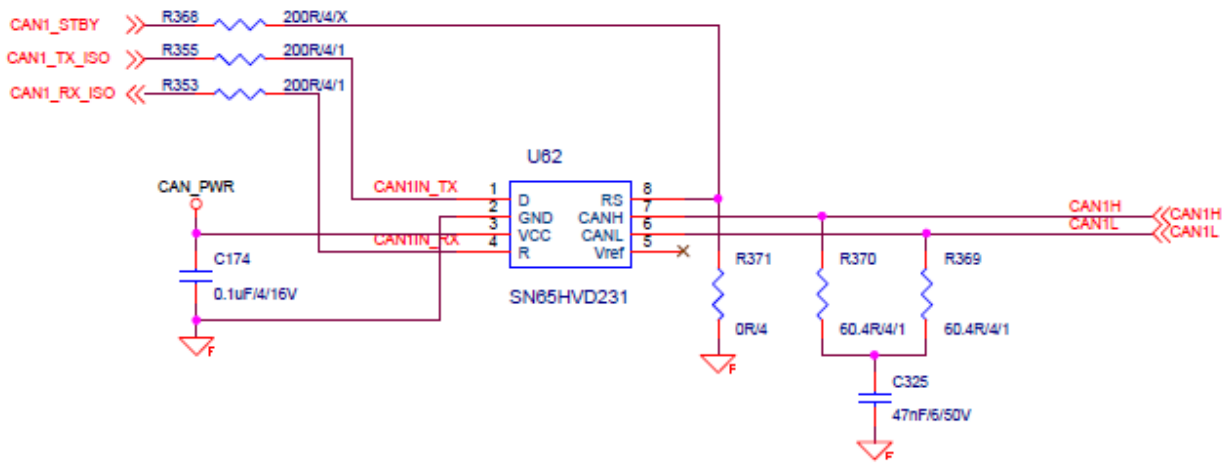

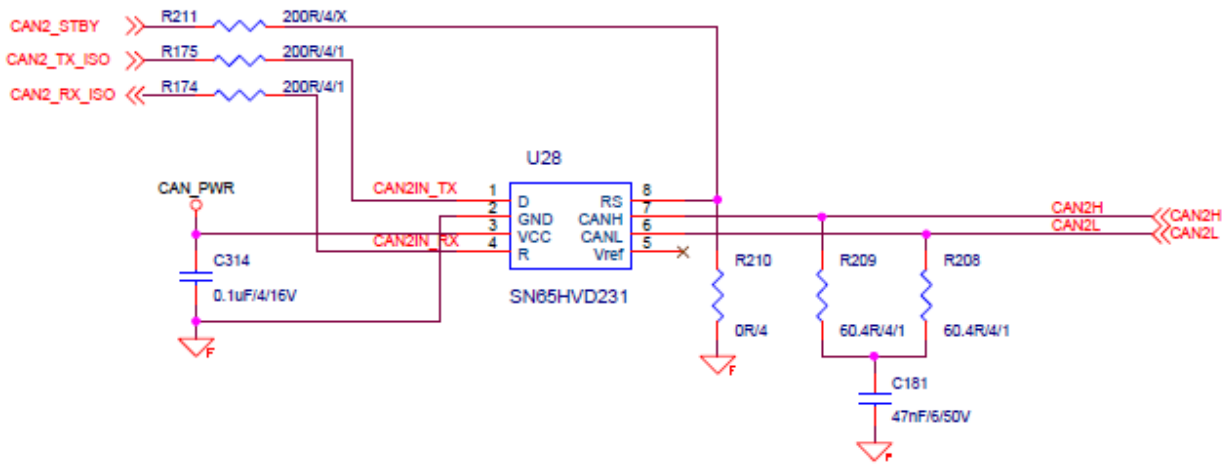

I²C Bus

The I²C works as a master port by default: The master port is pulled high to +3.3V with 2 on-board resistors. The slave devices have to be connected directly without additional power supply on I²C bus.

The I²C interface is connected to iMX6 I²C channel 3 and shared the same bus with on-board 3xPCF8574 I/O expander.

DELTA COMPONENTS GmbH · Auweg 27 · D-79761 Waldshut-Tiengen · Tel.: +49/7751/8399-0 · Fax: +49/7751/8399-99
www.delta-components.de E-mail: info@delta-components.de

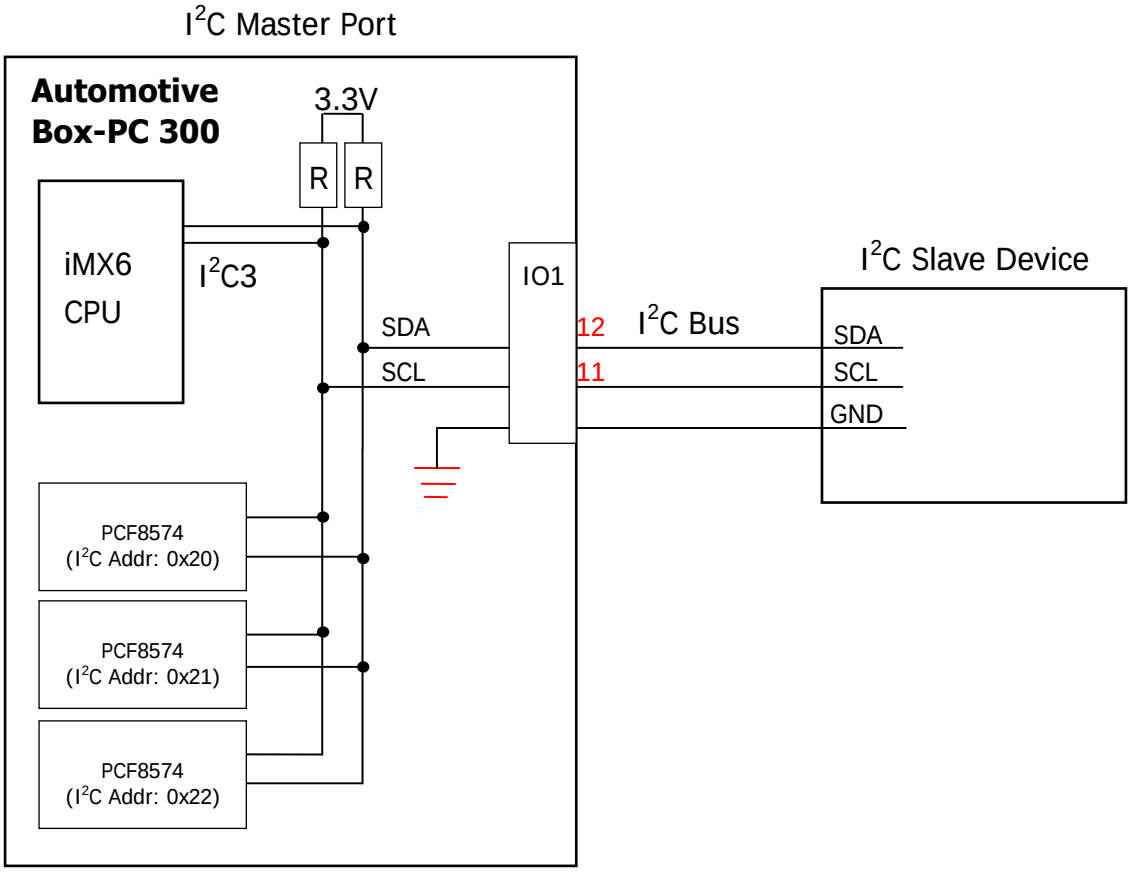

DELTA COMPONENTS GmbH · Auweg 27 · D-79761 Waldshut-Tiengen · Tel.: +49/7751/8399-0 · Fax: +49/7751/8399-99
www.delta-components.de E-mail: info@delta-components.de

3.6 IO2 (GPIO) Connector

The IO2 is an 18-pin connector for GPIO. Refer to Appendix E for IO2 (GPIO) **mating** connector specification. Refer to Appendix F for IO2 (GPIO) connector specification.

The connector pin assignment and pin functions are in the following table and diagrams:

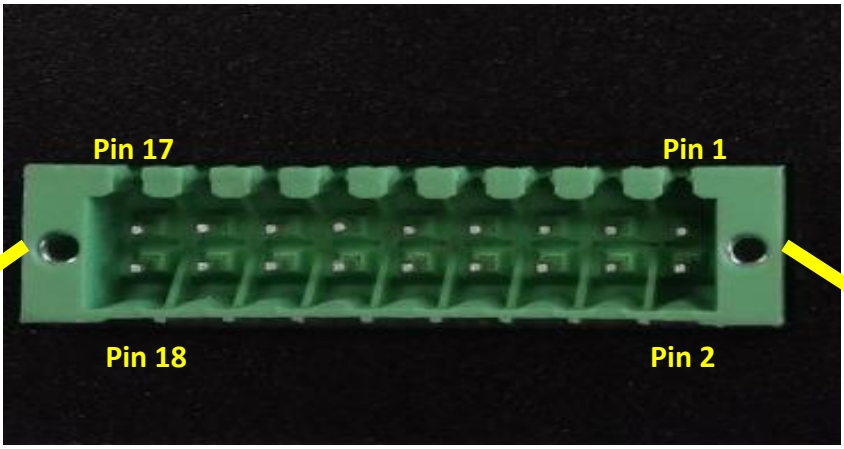

Pin 17	15	13	11	9	7	5	3	Pin 1
GND	**PWR (+5V)**	GPO (GPIO2_15)	**Reserved**	**Reserved**	**Reserved**	GPO (GPIO2_13)	**PWR (+5V)**	**GND**
Pin 18	**16**	**14**	**12**	**10**	**8**	**6**	**4**	**Pin 2**
GPI (GPIO2_21)	GPI (GPIO4_28)	GPI (GPIO4_27)	GPI (GPIO4_26)	GPI (GPIO4_25)	GPI (GPIO4_24)	GPI (GPIO4_23)	GPI (GPIO4_22)	GPI (GPIO4_21)

GPIO names in Linux:

Connector Pin	GPIO Name	I/O	Linux Name
2	GPIO4_21	IN	/sys/class/gpio/gpio224
4	GPIO4_22	IN	/sys/class/gpio/gpio225
5	GPIO2_13	OUT	/sys/class/gpio/gpio232
6	GPIO4_23	IN	/sys/class/gpio/gpio226
8	GPIO4_24	IN	/sys/class/gpio/gpio227
10	GPIO4_25	IN	/sys/class/gpio/gpio228
12	GPIO4_26	IN	/sys/class/gpio/gpio229
13	GPIO2_15	OUT	/sys/class/gpio/gpio233
14	GPIO4_27	IN	/sys/class/gpio/gpio230
16	GPIO4_28	IN	/sys/class/gpio/gpio231
18	GPIO2_21	IN	/sys/class/gpio/gpio247

DELTA COMPONENTS GmbH · Auweg 27 · D-79761 Waldshut-Tiengen · Tel.: +49/7751/8399-0 · Fax: +49/7751/8399-99
www.delta-components.de E-mail: info@delta-components.de

// Linux commands for GPIO

echo 1 > /sys/class/gpio/gpio232 // set gpio232 output high

echo 0 > /sys/class/gpio/gpio232 // set gpio232 output low

cat /sys/class/gpio/gpio224 // read gpio224 value

The GPIO pins are from 3 different PCF8574 I/O expanders, with I^2C addresses at 0x20, 0x21 and 0x22 respectively. The schematics and I^2C addresses are in below diagrams:

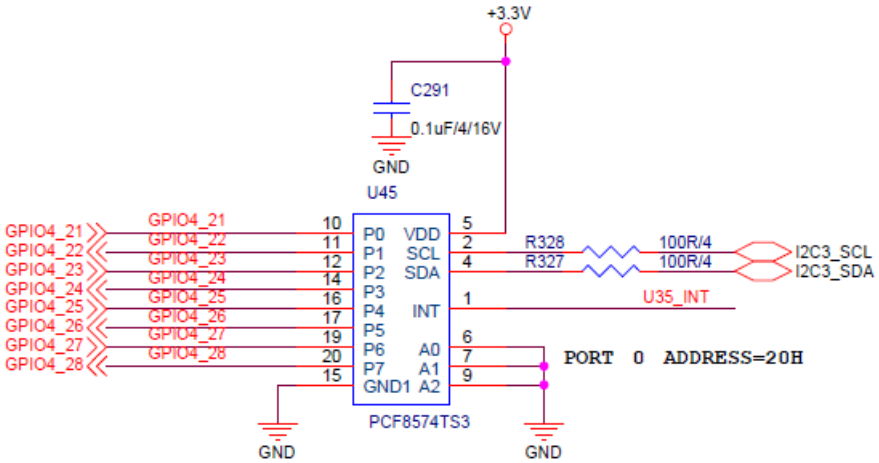

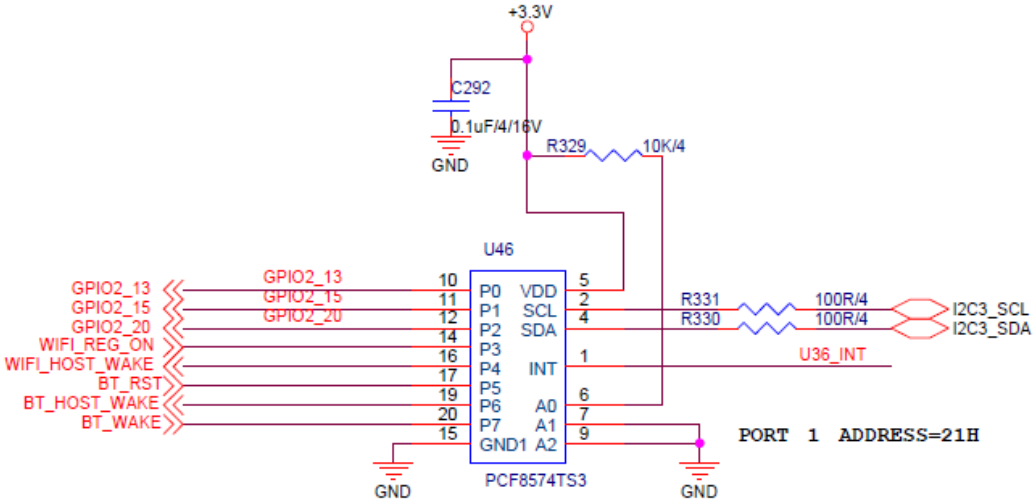

DELTA COMPONENTS GmbH · Auweg 27 · D-79761 Waldshut-Tiengen · Tel.: +49/7751/8399-0 · Fax: +49/7751/8399-99
www.delta-components.de E-mail: info@delta-components.de

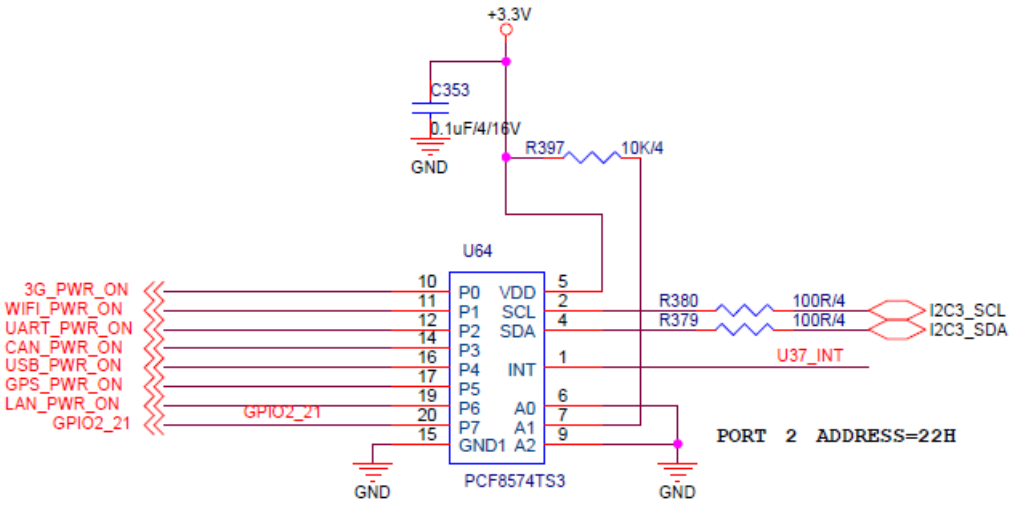

Each GPI is a photo-coupled (5KVrms) digital input with schematic shown below. The external digital input is clamped to 36V by a voltage suppressor. Refer to Appendix A for brief specification of the photo-coupler.

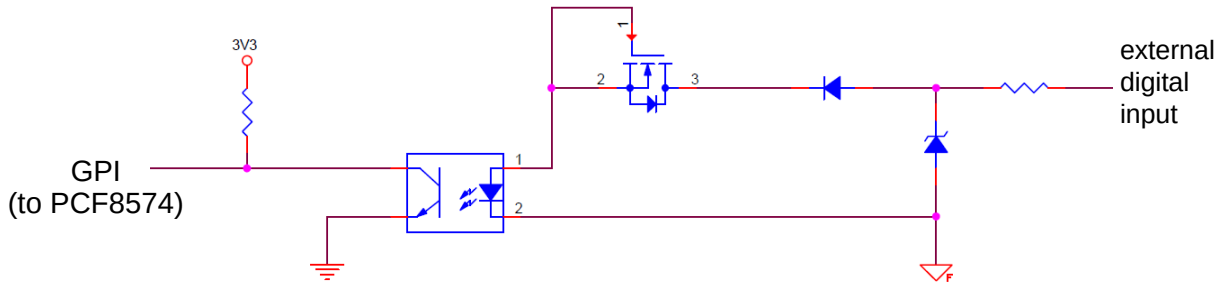

Each GPO is a photo-coupled digital output with schematic shown below. The GPO is an output from PCF8574 I/O expander and output level is pulled-up to 5V.

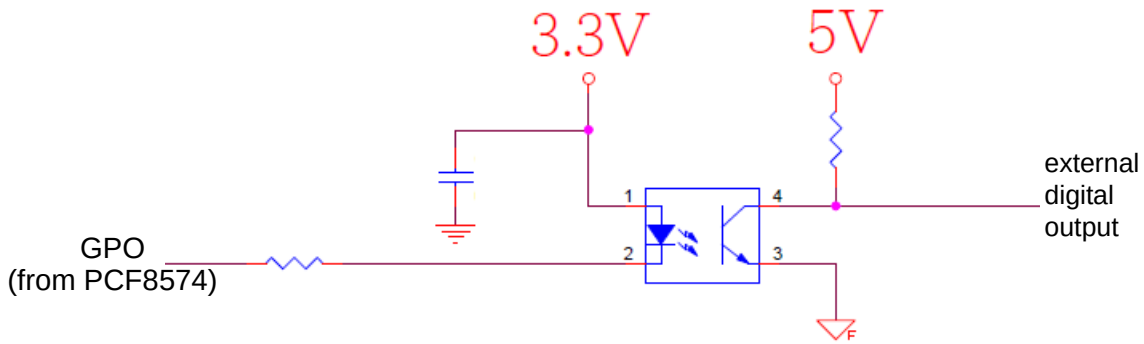

DELTA COMPONENTS GmbH · Auweg 27 · D-79761 Waldshut-Tiengen · Tel.: +49/7751/8399-0 · Fax: +49/7751/8399-99
www.delta-components.de E-mail: info@delta-components.de

PWR pin

Connector pins 3 and 15 are power supply pins. The voltage level can be selected from JP3 or JP6. Default voltage is +5V.

Use JP3 to select pin 3 voltage level, and use JP6 to select pin 15

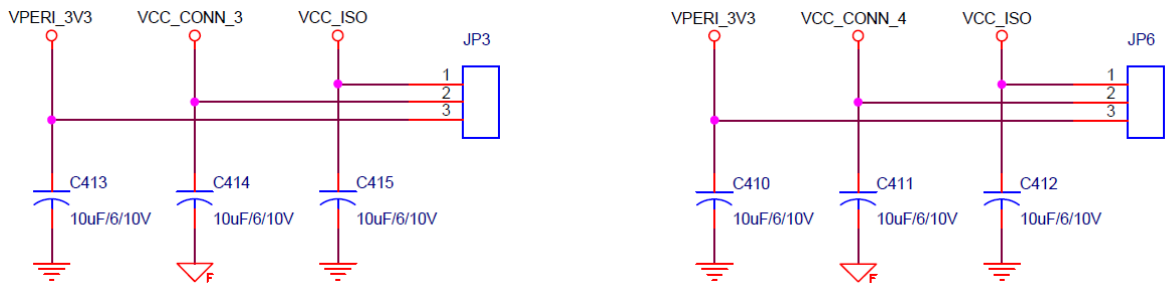

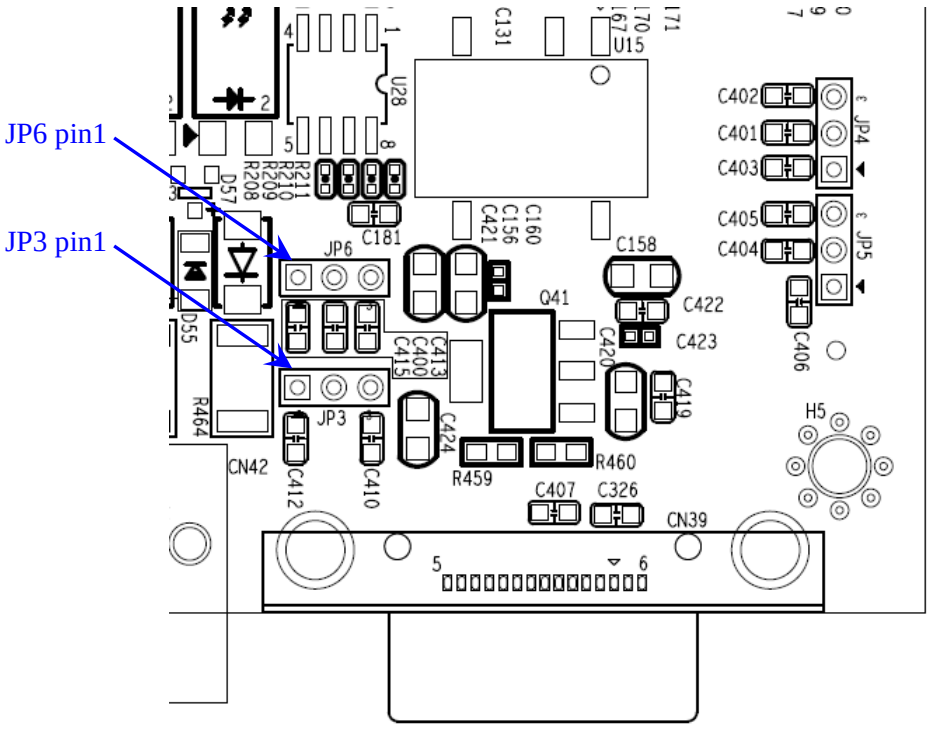

DELTA COMPONENTS GmbH · Auweg 27 · D-79761 Waldshut-Tiengen · Tel.: +49/7751/8399-0 · Fax: +49/7751/8399-99
www.delta-components.de E-mail: info@delta-components.de

3.7 USB Connectors

The USB interfaces on Automotive Box-PC 300 include a USB OTG port and two USB host ports. All USB ports support 480Mbps high speed.

The iMX6 USB host interface is connected to a hub controller to extend to 4x host ports:

- Two USB ports are available in standard Type A connectors for external connection.
- One USB port for 3G/LTE modem (to mini-PCIe connector)
- One USB port is available in on-board connector (CN9) for expansion use

USB Port:

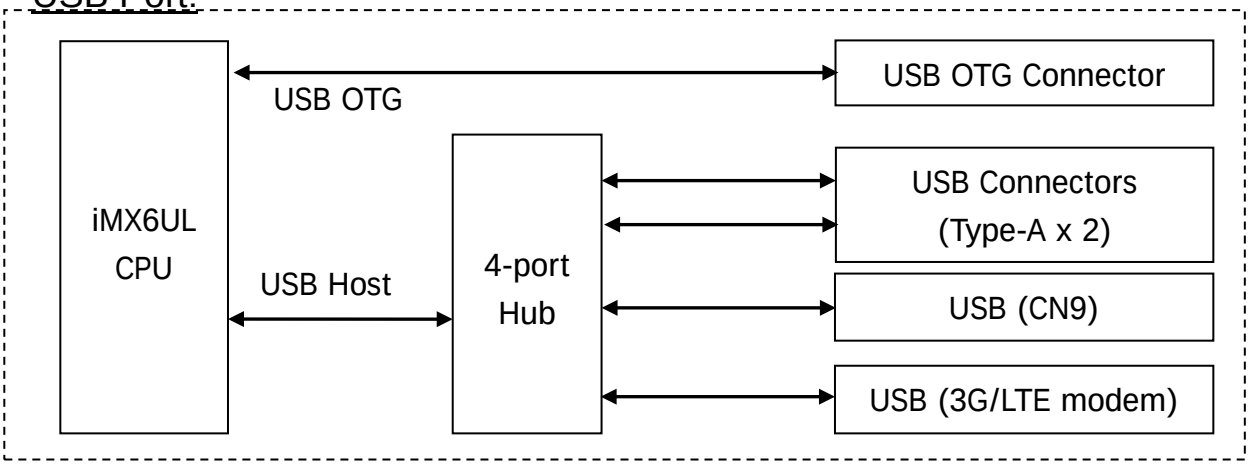

NOTE: The USB 2.0 OTG can be used in host mode or device mode. If you would like to use it in host mode, a separate OTG-to-host cable is required.

The USB host connector is a standard USB type A connector that can be connected to +5V USB storage device.

CN9 Schematic:

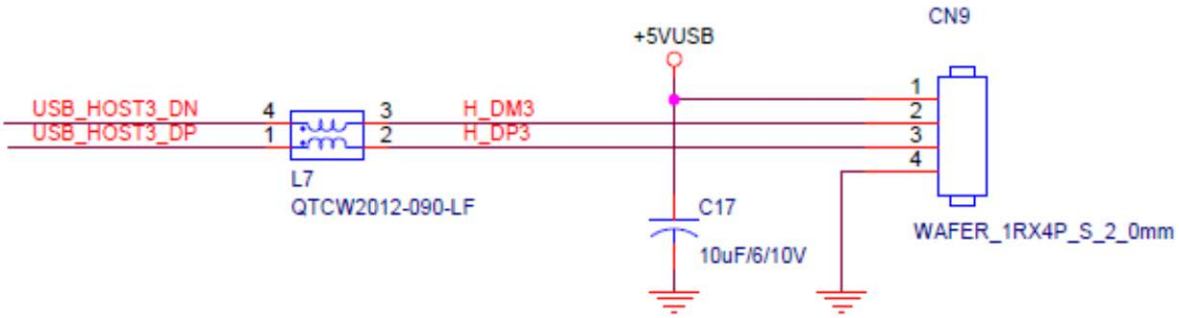

DELTA COMPONENTS GmbH · Auweg 27 · D-79761 Waldshut-Tiengen · Tel.: +49/7751/8399-0 · Fax: +49/7751/8399-99
www.delta-components.de E-mail: info@delta-components.de

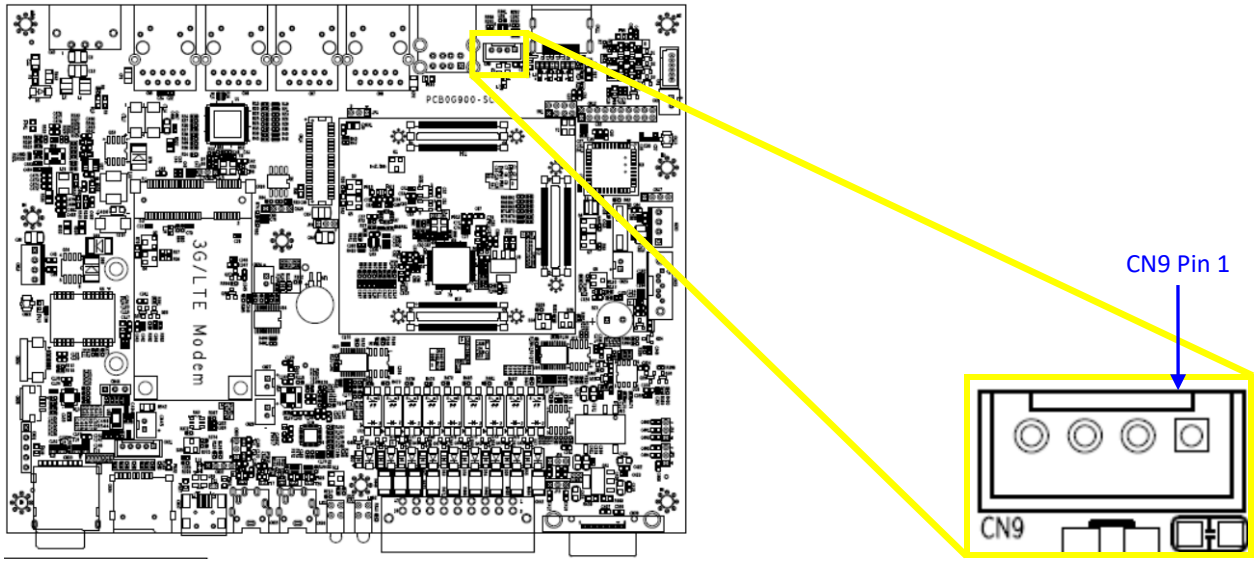

DELTA COMPONENTS GmbH · Auweg 27 · D-79761 Waldshut-Tiengen · Tel.: +49/7751/8399-0 · Fax: +49/7751/8399-99
www.delta-components.de E-mail: info@delta-components.de

3.8 GPS Receiver

The GPS receiver function is implemented by a u-blox 7 GNSS chip (UBX-G7020-KT). It is connected to iMX6 via UART4 (Linux device name: /dev/ttymxc3) serial interface. The GPS antenna connector is CN22.

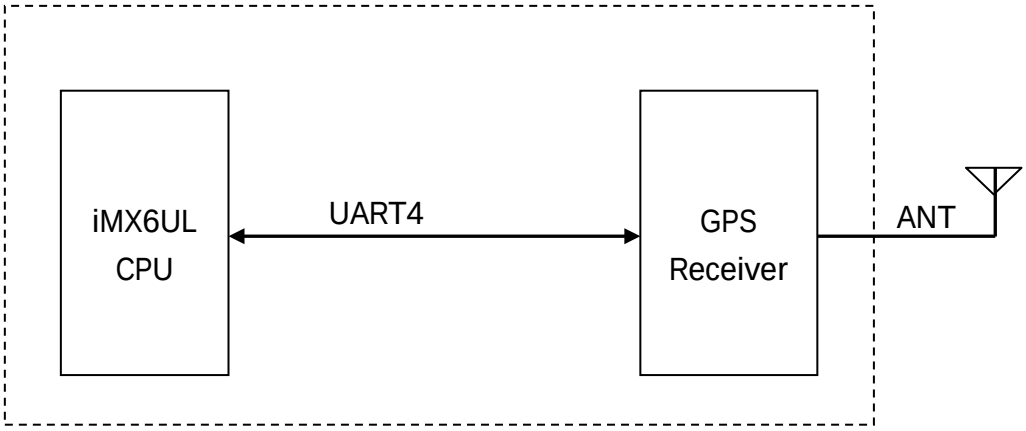

The brief characteristic of the receiver is in the table below:

Receiver type	56 channel (GPS, GLONASS)
Navigation update rate	Up to 10Hz
Protocol	NEMA 0183 v2.3
Accuracy	Position : 2.5m (GPS), 4m (GLONASS); SBAS: 2.0m
Acquisition	Cold Start: 29 seconds; Hot Start: 1 seconds
Sensitivity	Tracking: -162dBm Cold Starts: -148dBm Reacquisition: -160dBm
Supply Voltage	1.4V to 3.6V
Power Consumption	41mW @ 1.4V (Continuous) 9mW @ 1.4V Power Save mode
Operating temp	-40°C to 85°C

For more information about UBX-G7020-KT chip, please check it on u-blox web site.

DELTA COMPONENTS GmbH · Auweg 27 · D-79761 Waldshut-Tiengen · Tel.: +49/7751/8399-0 · Fax: +49/7751/8399-99
www.delta-components.de E-mail: info@delta-components.de

3.9 miniPCIe Connector (for 3G/LTE modem)

The Automotive Box-PC 300 miniPCIe connector (3G/LTE modem) is connected to iMX6 CPU through USB port.

A GPIO pin is used to control 3G/LTE modem power on/off. Refer to Section 3-2 for this GPIO.

To insert SIM card to Automotive Box-PC 300, you have to unscrew and open Automotive Box-PC 300 small front plate, locate SIM slot at the area marked with SIM1/SIM2.

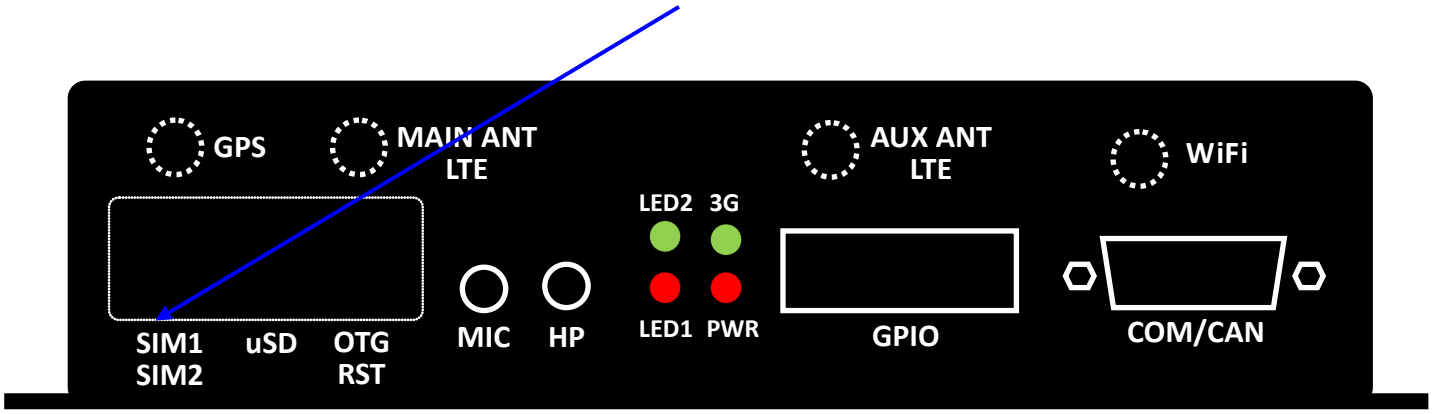

DELTA COMPONENTS GmbH · Auweg 27 · D-79761 Waldshut-Tiengen · Tel.: +49/7751/8399-0 · Fax: +49/7751/8399-99
www.delta-components.de E-mail: info@delta-components.de

3.10 WiFi and Bluetooth

The Automotive Box-PC 300 WiFi and Bluetooth module is connected to iMX6 CPU through SDIO and UART port. The WiFi and Bluetooth function is based on a Broadcom BCM43455 combo chip. The antenna connector is CN13.

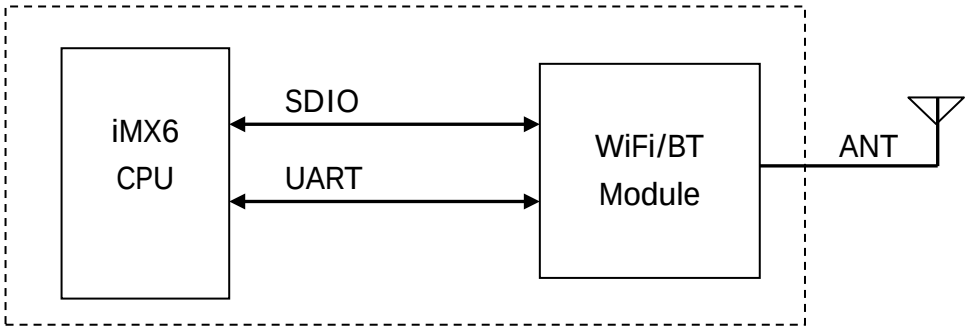

Function	Features
WiFi	● Dual band (2.4GHz/5GHz) 802.11a/b/g/n/ac single stream up to 433Mbps data rate
Bluetooth	● Bluetooth V4.2 of 1,2 and 3 Mbps

DELTA COMPONENTS GmbH · Auweg 27 · D-79761 Waldshut-Tiengen · Tel.: +49/7751/8399-0 · Fax: +49/7751/8399-99
www.delta-components.de E-mail: info@delta-components.de

3.11 G-Sensor & e-Compass

The Automotive Box-PC 300 has built-in 3-axis G-sensor and e-compass functions.
The 3-axis G-sensor function is based on NXP MMA8451QT chip and e-compass function is based on NXP MAG3110 chip.
Both chips are connected to iMX6 cpu via I^2C bus channel 1.

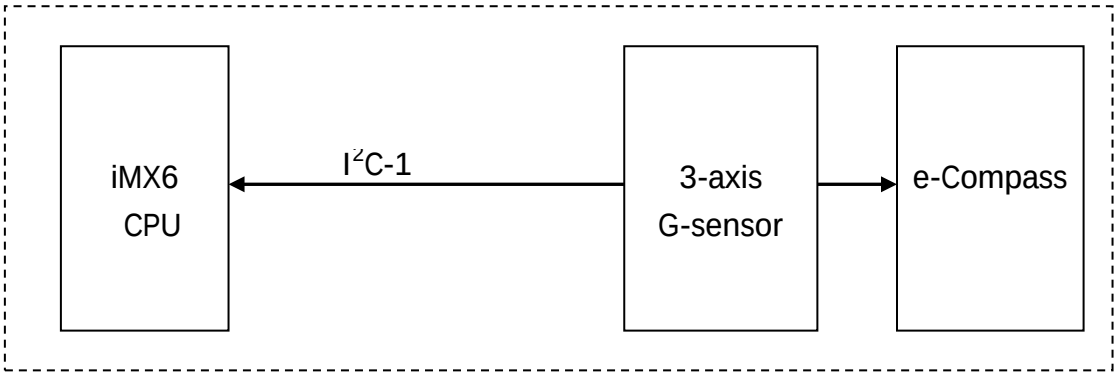

For more information about G-sensor and e-Compass, refer to NXP product data sheet.

DELTA COMPONENTS GmbH · Auweg 27 · D-79761 Waldshut-Tiengen · Tel.: +49/7751/8399-0 · Fax: +49/7751/8399-99
www.delta-components.de E-mail: info@delta-components.de

3.12 Ethernet

The Automotive Box-PC 300 is with a 10/100M/1Gb bps Ethernet interface on the industrial standard RJ45 connector.

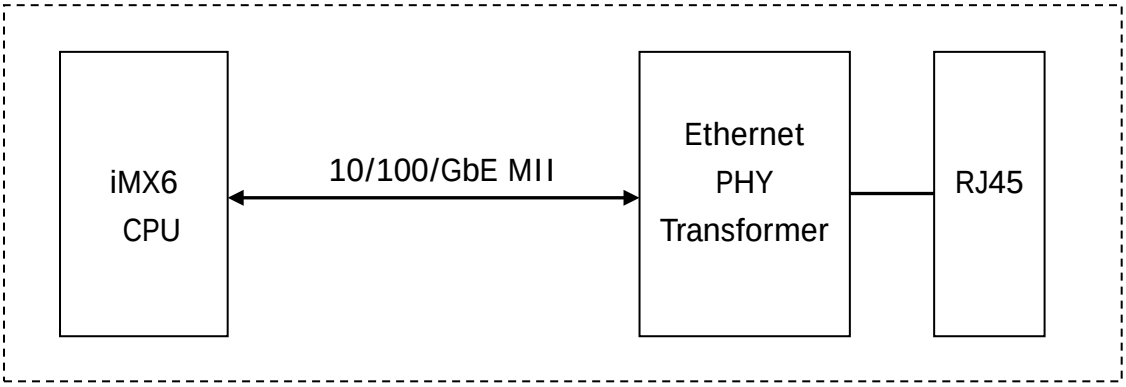

An optional LAN switch is available to extend to 4x GbE LAN port.

DELTA COMPONENTS GmbH · Auweg 27 · D-79761 Waldshut-Tiengen · Tel.: +49/7751/8399-0 · Fax: +49/7751/8399-99
www.delta-components.de E-mail: info@delta-components.de

3.13 mSATA Connector

The Automotive Box-PC 300 is with an mSATA connector for installing mSATA SSD.
The mSATA connector supports the following SATA specifications:

- AHCI Revision 1.3
- SATA 1.5 Gb/s and SATA 3.0 Gb/s speed

Please make sure your mSATA SSD module supports both the above specifications before installing it onto the connector.

DELTA COMPONENTS GmbH · Auweg 27 · D-79761 Waldshut-Tiengen · Tel.: +49/7751/8399-0 · Fax: +49/7751/8399-99
www.delta-components.de E-mail: info@delta-components.de

3.14 Audio (optional)

The Automotive Box-PC 300 audio interface is with 1x audio jack available for external headphone and microphone.

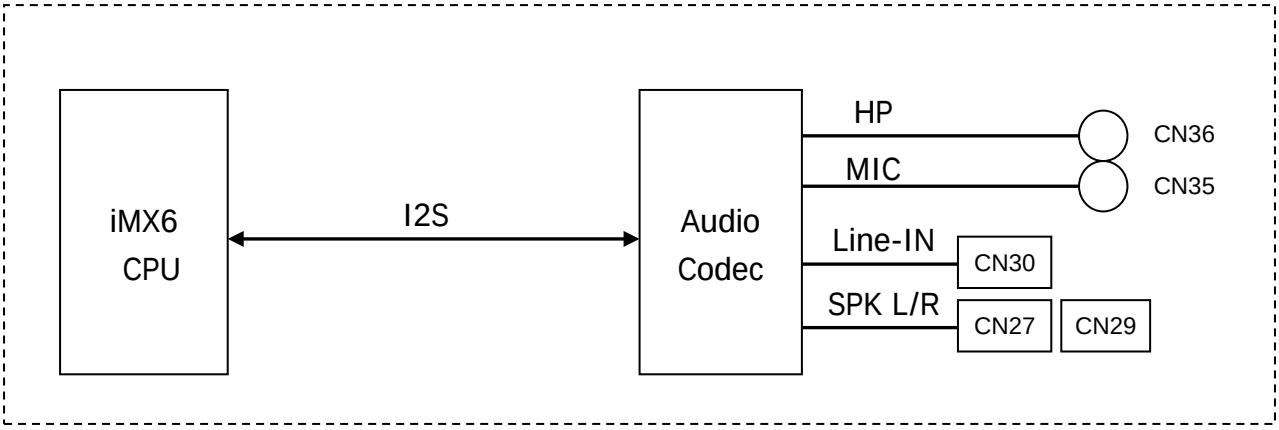

The line-in and speaker interfaces are at CN30, CN27 and CN29 connectors on Automotive Box-PC 300 PCB. The schematics are here:

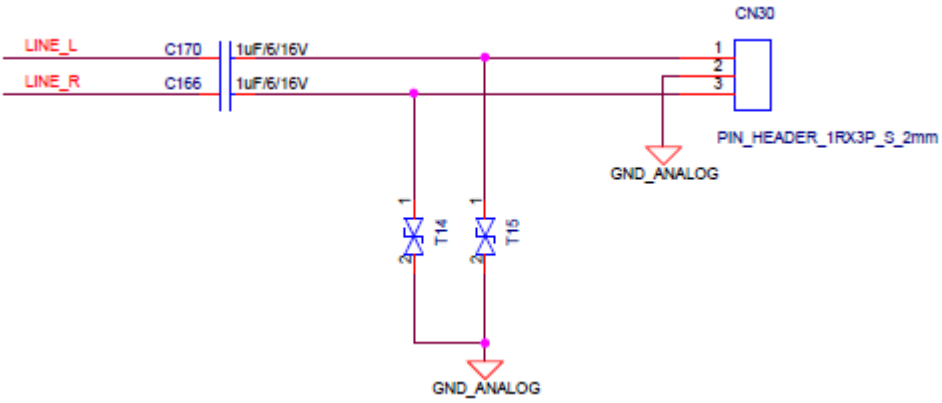

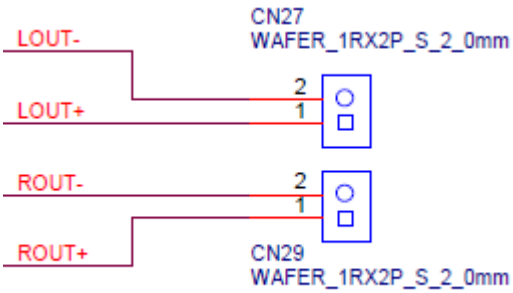

DELTA COMPONENTS GmbH · Auweg 27 · D-79761 Waldshut-Tiengen · Tel.: +49/7751/8399-0 · Fax: +49/7751/8399-99
www.delta-components.de E-mail: info@delta-components.de

3.15 Unique CPU ID

Each Automotive Box-PC 300 product is with a unique Serial Number on iMX6. The unique serial number allows software developer to identify (or protect) their software by the unique number.

Use the following Linux commands to read CPU ID:

```
# cat /sys/fsl_otp/HW_OCOTP_CFG0
0xe301388d              // sample output
# cat /sys/fsl_otp/HW_OCOTP_CFG1
0x220f11d4              // sample output
```

You can concatenate CFG0 and CFG1 together to form a unique ID.
For example, the unique ID is: 0xe301388d220f11d4 .

DELTA COMPONENTS GmbH · Auweg 27 · D-79761 Waldshut-Tiengen · Tel.: +49/7751/8399-0 · Fax: +49/7751/8399-99
www.delta-components.de E-mail: info@delta-components.de

3.16 LED

There are 4x LEDs at the Automotive Box-PC 300 front panel:

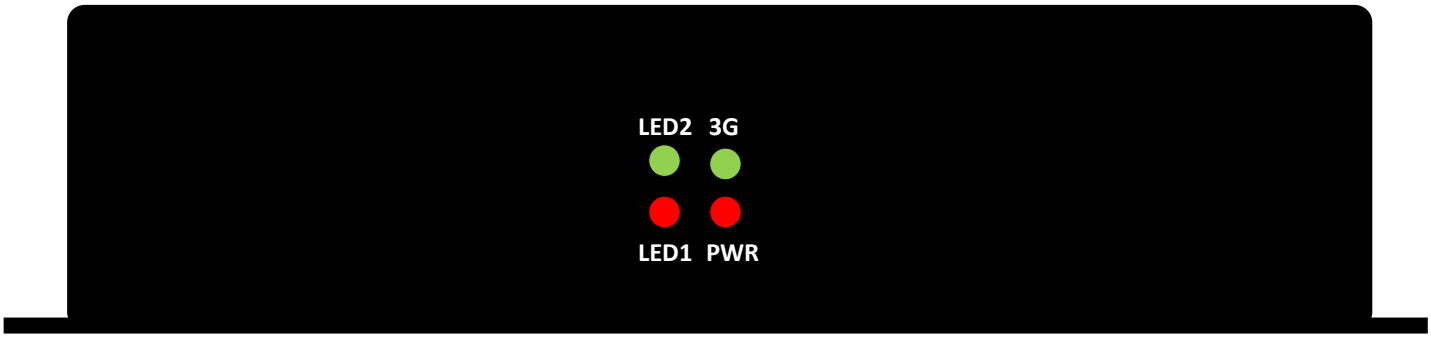

- When DC power is applied, PWR LED is on
- 3G LED mode is in below table:

Mode	Operating Status	LED ON/OFF
1	No service/Restricted service	ON(0.1s) - OFF(0.1s) - ON(0.1s) - OFF(1.7s) 2-second cycle
2	Register to the network	ON(0.1s) - OFF (1.9s) 2-second cycle
3	Dial-up successfully	ON

When Automotive Box-PC 300 is connected to 3G/LTE network, the LED is ON.
In searching 3G/LTE network, the LED keeps blinking.

- LED1, LED2 are connected to below iMX6 pads directly and can be turned on/off by software.

LED name	iMX6 Ball	iMX6 Pad Name	iMX6 Signal
LED1	R7	GPIO_3	GPIO1_IO03
LED2	W5	KEY_COL0	GPIO4_IO06

```
// Linux commands to turn on/off LED1 or LED2:
# echo 1 > /sys/class/leds/led1/brightness        // led1 off
# echo 0 > /sys/class/leds/led1/brightness        // led1 on

# echo 1 > /sys/class/leds/led2/brightness        // led2 off
# echo 0 > /sys/class/leds/led2/brightness        // led2 on
```


DELTA COMPONENTS GmbH · Auweg 27 · D-79761 Waldshut-Tiengen · Tel.: +49/7751/8399-0 · Fax: +49/7751/8399-99
www.delta-components.de E-mail: info@delta-components.de

3.17 MicroSD Connector

The microSD host connector is an industrial standard connector and has the following specification:

- SD Host Controller Standard Specification version 3.0
- MMC System Specification version 4.2/4.3/4.4
- SD Memory Card Specification version 3.0 and supports the Extended Capacity SD Memory Card
- SDIO Card Specification version 3.0

DELTA COMPONENTS GmbH · Auweg 27 · D-79761 Waldshut-Tiengen · Tel.: +49/7751/8399-0 · Fax: +49/7751/8399-99
www.delta-components.de E-mail: info@delta-components.de

3.18 BM Connectors (Firmware Update)

The CN32 connector is used to select Automotive Box-PC 300 mode: Normal Operation mode or Firmware Download mode. The Firmware Download mode is for Android/Linux OS update only. If you would like to update your application software, **do not** use this Firmware Update function.

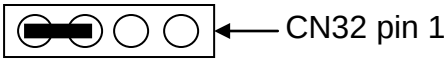

Firmware Download:

Pin 1, 2 open

Pin 3, 4 short

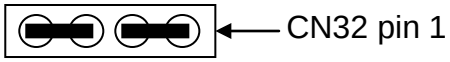

Normal Operation:

Pin 1, 2 short

Pin 3, 4 short

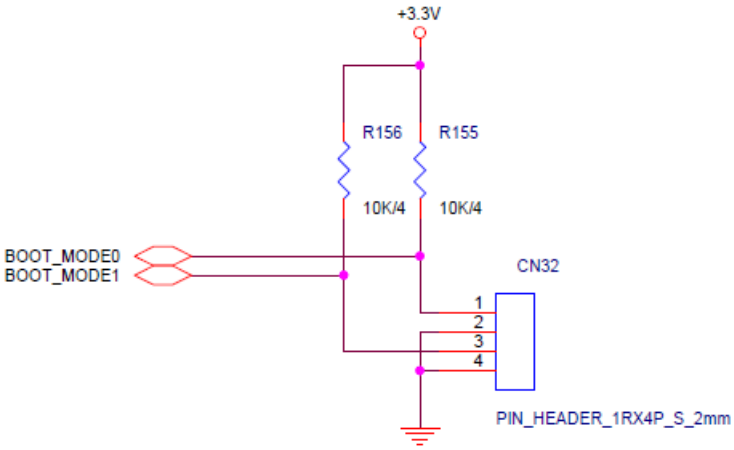

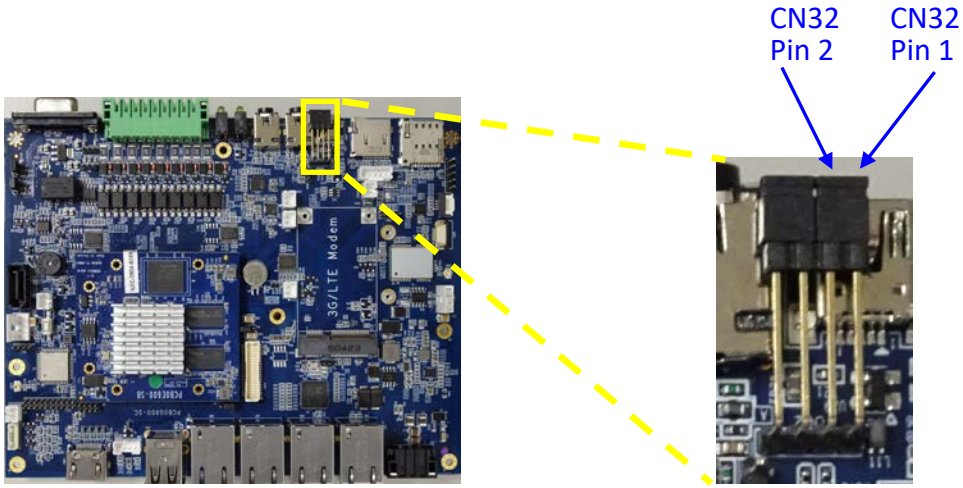

DELTA COMPONENTS GmbH · Auweg 27 · D-79761 Waldshut-Tiengen · Tel.: +49/7751/8399-0 · Fax: +49/7751/8399-99
www.delta-components.de E-mail: info@delta-components.de

3.19 Other functions

The other additional functions on Automotive Box-PC 300 include:

Tact Switch

SW3 is a tact switch connected directly to iMX6 cpu pin. The GPIO_SW (in below schematic) is connected to iMX6 pad name: CSI0_VSYNC (ball name N2). Contact us for the Linux device name, if you plan to use this switch.

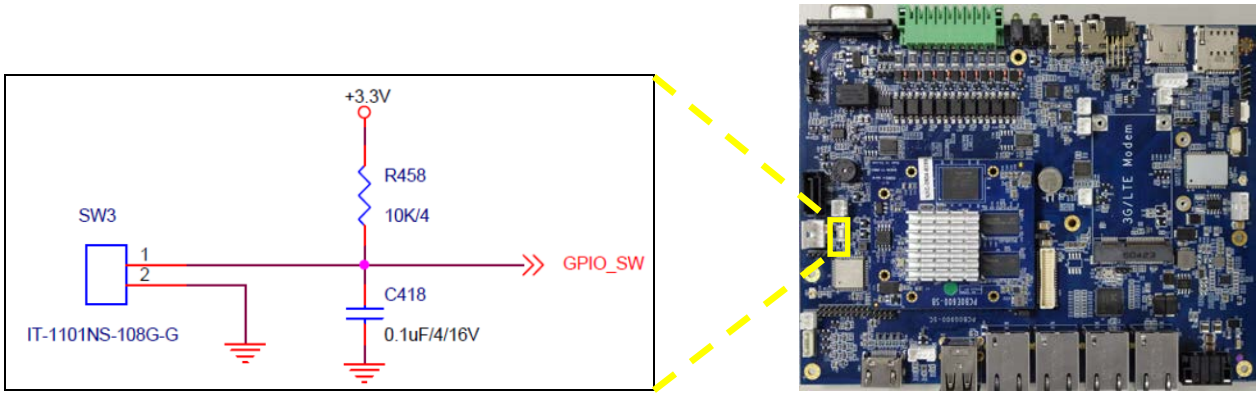

Power Output Connector

The CN16 power output connector provides +3.3V, +5V, +12V power to external devices with limited current (about a few hundred mA for each voltage).

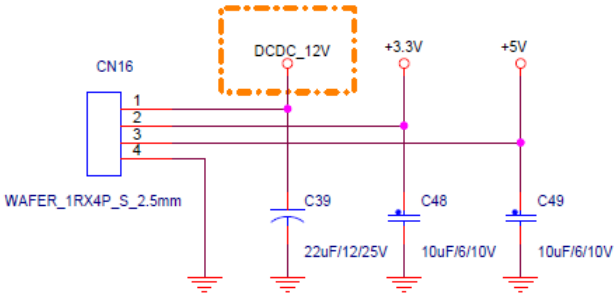

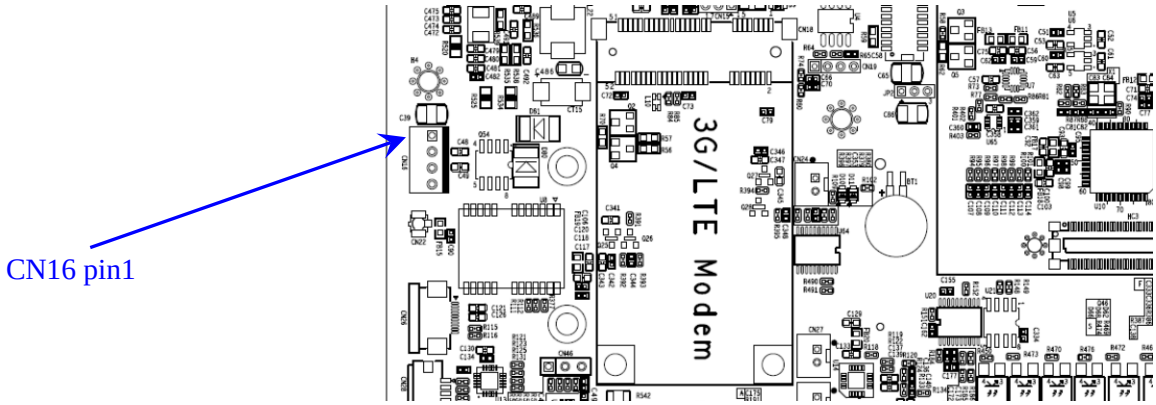

DELTA COMPONENTS GmbH · Auweg 27 · D-79761 Waldshut-Tiengen · Tel.: +49/7751/8399-0 · Fax: +49/7751/8399-99
www.delta-components.de E-mail: info@delta-components.de

4 Outline Drawing

Automotive Box-PC 300 aluminum enclosure outline drawing (cross section):

unit: mm

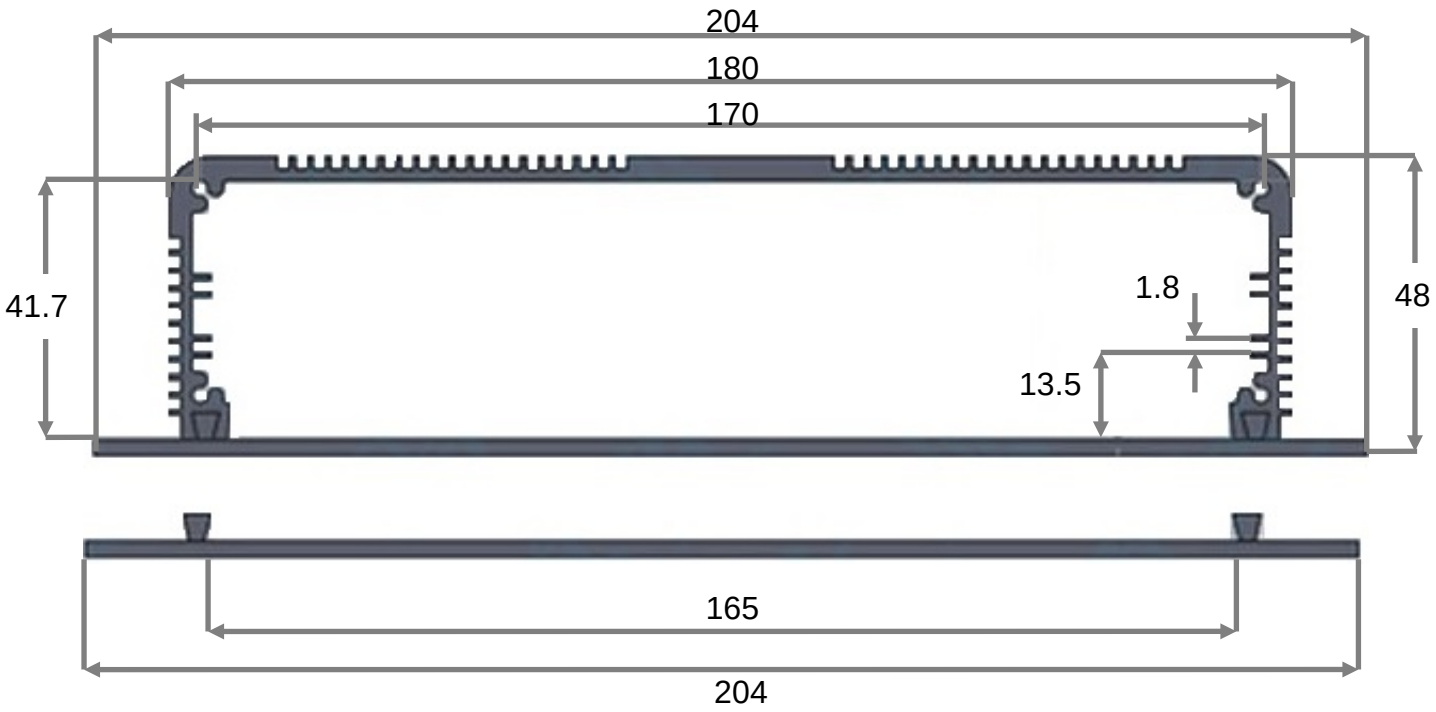

DELTA COMPONENTS GmbH · Auweg 27 · D-79761 Waldshut-Tiengen · Tel.: +49/7751/8399-0 · Fax: +49/7751/8399-99
www.delta-components.de E-mail: info@delta-components.de

5 Electrical Specifications

Absolute Maximum Ratings

	Min	Max	Unit	Note
Main Power Supply (DC-IN)	8.55	37.8	V	
Operating Temperature	-20	+70	^{o}C	

Operating Range:

	Min	Max	Unit	Note
Main Power Supply (DC-IN)	9	36	V	

VSS = 0V. VDD = +3.3V

DELTA COMPONENTS GmbH · Auweg 27 · D-79761 Waldshut-Tiengen · Tel.: +49/7751/8399-0 · Fax: +49/7751/8399-99
www.delta-components.de E-mail: info@delta-components.de

Appendix A: GPIO Photo-Coupler Spec

Features:

- Current transfer ratio
  (CTR:MIN.50% at IF =5mA ,VCE =5V)
- High isolation voltage between input and output (Viso=5000 V rms)
- Compact dual-in-line package
  EL817*:1-channel type
- Pb free

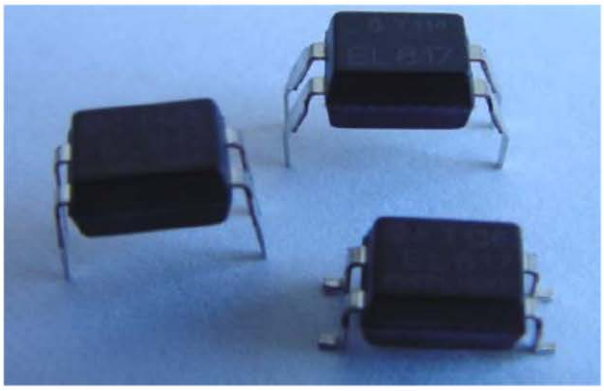

- UL approved (No. E214129)
- VDE approved (No. 132249)
- SEMKO approved (No. 0143133/01-03)
- NEMKO approved (No. P00102385)
- DEMKO approved (No. 310352-04)
- FIMKO approved (No. FI 16763A2)
- CSA approved (No. 1143601)
- BSI approved (No. 8592 / 8593)

Absolute Maximum Ratings **(Ta=25°C)**

Parameter		Symbol	Rating	Unit
Input	Forward Current	I_F	50	mA
	Reverse Voltage	V_R	6	V
	Power Dissipation	P	70	mW
Output	Collector Power Dissipation	P_C	150	mW
	Collector Current	I_C	50	mA
	Collector-Emitter Voltage	V_{CEO}	35	V
	Emitter-Collector Voltage	V_{ECO}	6	V
Total Power Dissipation		Ptot	200	mW
*1 Isolation Voltage		Viso	5000	V rms
Operating Temperature		Topr	-55~+110	°C
Storage Temperature		Tstg	-55~+125	°C
*2 Soldering Temperature		Tsol	260	°C

DELTA COMPONENTS GmbH · Auweg 27 · D-79761 Waldshut-Tiengen · Tel.: +49/7751/8399-0 · Fax: +49/7751/8399-99
www.delta-components.de E-mail: info@delta-components.de

*1 AC for 1 minute, R.H= 40~ 60%RH

-Isolation voltage shall be measured using the following method.

(1) Short between anode and cathode on the primary side and between collector, emitter and base on the secondary side.

(2) The isolation voltage tester with zero-cross circuit shall be used.

(3) The waveform of applied voltage shall be a sine wave

*2 For 10 seconds

Electro-Optical Characteristics

(Ta=25°C)

Parameter		Symbol	Min.	Typ.	Max.	Unit	Condition
Input	Forward	V_F	-	1.2	1.4	V	I_F=20mA
	Reverse Current	I_R	-	-	10	uA	V_R=4V
	Terminal	Ct	-	30	250	pF	V=0,f=1kHz
Output	*Collector Dark current*	I_{CEO}	-	-	100	nA	V_{CE}=20V
	Collector-Emitter breakdown voltage	BV_{CEO}	35	-	-	V	Ic=0.1mA
Transfer Characteristics	Current Transfer ratio	CTR	50	-	600	%	I_F=5mA ,V_{CE}=5V
	Collector-Emitter saturation voltage	$V_{CE(sat)}$	-	0.1	0.2	V	I_F=20mA ,Ic=1 mA
	Isolation resistance	R_{ISO}	$5x10^{10}$	10^{11}	-	Ω	DC500V,40~60%R.H
	Floation capacitance	Cf	-	0.6	1.0	pF	V=0, f=1MHz
	Cut-off frequency	fc	-	80	-	kHz	V_{CE}=5V, I_C=2 mA R_L=100Ω, -3dB
	Rise time	t_r	-	4	18	us	V_{CE}=2V I_C=2mA,R_L=100Ω
	Fall time	t_f	-	3	18	us	

DELTA COMPONENTS GmbH · Auweg 27 · D-79761 Waldshut-Tiengen · Tel.: +49/7751/8399-0 · Fax: +49/7751/8399-99
www.delta-components.de E-mail: info@delta-components.de

Appendix B: UART/CAN Photo-Coupler Spec

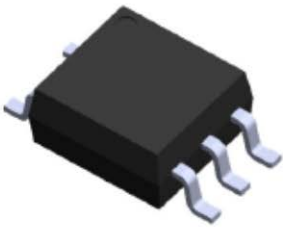

Schematic

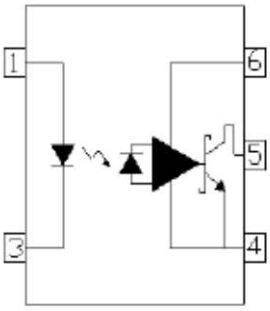

Pin Configuration
1, Anode
3, Cathode
4, Gnd
5, Vout
6, V_{CC}

Features

- High speed 10Mbit/s
- Guaranteed performance from -40 to 85℃
- Logic gate output
- High isolation voltage between input and output (Viso=3750 V rms)
- Pb free and RoHS compliant.
- UL approved (No. 214129)
- VDE approved (No. 40028116)
- SEMKO approved
- NEMKO approved
- DEMKO approved
- FIMKO approved

Absolute Maximum Ratings (Ta=25℃)

Parameter		Symbol	Rating	Unit
Input	Forward current	I_F	50	mA
	Reverse voltage	V_R	5	V
	Power dissipation	P_D	100	mW
Output	Power dissipation	P_C	85	mW
	Output current	I_O	50	mA
	Output voltage	V_O	7.0	V
	Supply voltage	V_{CC}	7.0	V
Output Power Dissipation		P_O	85	mW
Isolation Voltage*1		V_{ISO}	3750	V rms
Operating Temperature		T_{OPR}	-40 ~ +85	℃
Storage Temperature		T_{STG}	-55 ~ +125	℃
Soldering Temperature*2		T_{SOL}	260	℃

Notes:
*1 AC for 1 minute, R.H.= 40 ~ 60% R.H. In this test, pins 1 & 3 are shorted together, and pins 4, 5 & 6 are shorted together.

*2 For 10 seconds

DELTA COMPONENTS GmbH · Auweg 27 · D-79761 Waldshut-Tiengen · Tel.: +49/7751/8399-0 · Fax: +49/7751/8399-99
www.delta-components.de E-mail: info@delta-components.de

Electrical Characteristics (T_a=-40 to 85℃ unless specified otherwise)

Input

Parameter	Symbol	Min.	Typ.	Max.	Unit	Condition
Forward voltage	V_F	-	1.45	1.8	V	I_F = 10mA
Reverse voltage	V_R	5.0	-	-	V	I_R = 10μA, T_A=25℃
Temperature coefficient of forward voltage	$\Delta V_F/\Delta T_A$	-	-1.9	-	mV/℃	I_F =10mA
Input capacitance	C_{IN}	-	70	-	pF	V_F=0, f=1MHz

Output

Parameter	Symbol	Min	Typ.	Max.	Unit	Condition
High level supply current	I_{CCH}	-	6.0	9	mA	I_F=0mA, V_{CC}=5.5V
Low level supply current	I_{CCL}	-	7.5	10	mA	I_F=10mA, V_{CC}=5.5V

Transfer Characteristics

Parameter	Symbol	Min	Typ.	Max.	Unit	Condition
HIGH Level Output Current	I_{OH}	-	2.1	30	uA	V_{CC}=5.5V, V_O=5.5V, I_F=250uA
LOW Level Output Current	V_{OL}	-	0.4	0.6	V	V_{CC} = 5.5V, I_F=5mA, I_{OL}(Sinking)=13mA
Input Threshold Current	I_{FT}	-	2.4	5	mA	V_{CC}= 5.5V, V_O=0.6V, I_{OL}(Sinking)=13mA

DELTA COMPONENTS GmbH · Auweg 27 · D-79761 Waldshut-Tiengen · Tel.: +49/7751/8399-0 · Fax: +49/7751/8399-99
www.delta-components.de E-mail: info@delta-components.de

Switching Characteristics (T_a=-40 to 85℃, V_{CC}=5V, I_F=7.5mA unless specified otherwise)

Parameter		Symbol	Min	Typ.	Max.	Unit	Condition
Propagation delay time to output High level*3 (Fig.12)		T_{PHL}	-	41	100	ns	C_L = 15pF, R_L=350Ω, TA=25℃
Propagation delay time to output Low level*3 (Fig.12)		T_{PLH}	-	50	100	ns	C_L = 15pF, R_L=350Ω, TA=25℃
Pulse width distortion		|Tphl – Tplh|	-	9	35	ns	C_L = 15pF, R_L=350Ω
Propagation Delay Skew*4		t_{PSK}	-	-	40	ns	C_L = 15pF, R_L=350Ω
Output rise time (Fig.12)		tr	-	40	-	ns	C_L = 15pF, R_L=350Ω
Output fall time (Fig.12)		tf	-	10	-	ns	C_L = 15pF, R_L=350Ω
Common Mode Transient Immunity at Logic High *6(Fig.14)	M600	CM_H	-	-	-	V/µS	I_F = 7.5mA , V_{OH}=2.0V, R_L=350Ω, TA=25℃ V_{CM}=10Vp-p
	M601		5,000				I_F = 7.5mA , V_{OH}=2.0V, R_L=350Ω, TA=25℃ V_{CM}=50Vp-p
	M611		20,000				I_F = 7.5mA , V_{OH}=2.0V, R_L=350Ω, TA=25℃ V_{CM}=1000Vp-p
Common Mode Transient Immunity at Logic Low *7(Fig.14)	M600	CM_L	-	-	-	V/µS	I_F = 0mA , V_{OL}=0.8V, R_L=350Ω, TA=25℃ V_{CM}=10Vp-p
	M601		5,000				I_F = 0mA , V_{OL}=0.8V, R_L=350Ω, TA=25℃ V_{CM}=50Vp-p
	M611		20,000				I_F = 0mA , V_{OL}=0.8V, R_L=350Ω, TA=25℃ V_{CM}=1000Vp-p

*All typicals at Ta = 25℃, VCC = 5 V.

DELTA COMPONENTS GmbH · Auweg 27 · D-79761 Waldshut-Tiengen · Tel.: +49/7751/8399-0 · Fax: +49/7751/8399-99
www.delta-components.de E-mail: info@delta-components.de

Appendix C: DC-IN Mating Connector Specifications

FILE 0225\0225-06XX

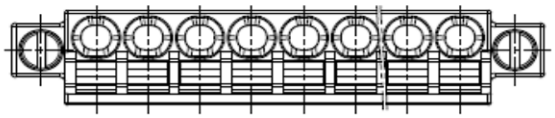

P	2	3	4	5	6	7	8	9	10	11	12	13
U	3.5	7.0	10.5	14.0	17.5	21.0	24.5	28.0	31.5	35.0	38.5	42.0
V	7.7	11.2	14.7	17.2	21.7	25.2	28.7	32.2	35.7	39.2	42.7	46.2
P	14	15	16	17	18	19	20	21	22	23	24	
U	45.5	49.0	52.5	56.0	59.5	63.0	66.5	70.0	73.5	77.0	80.5	
V	49.7	53.2	56.7	60.2	63.7	67.2	70.7	74.2	77.7	81.2	84.7	

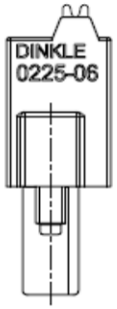

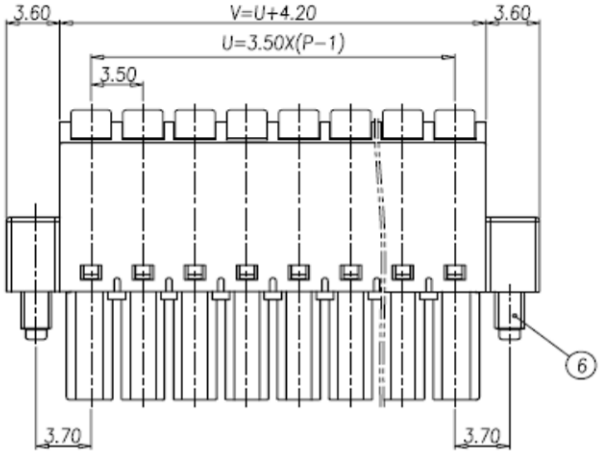

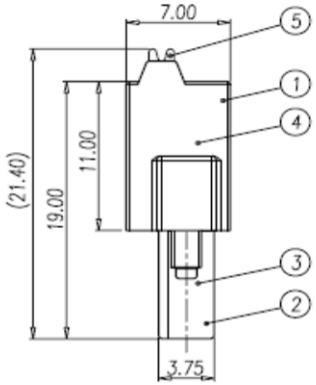

NOTES 1:

UL Standard :

1. Rating: 300V 8A
   PITCH: 3.50mm
2. Insulation Withstands Voltage:
   AC 2000V at 1 minute
3. Using Temperature Range:
   −40°C~+115°C
4. Suitable Electric Wire:
   AWG 28 ~ 16

IEC Standard :

1. Rating: 630V 15A
2. Rate Impulse Voltage: 5000V
3. Insulation Resistance:
   500MΩ or more at DC500V
4. Material Group : I
5. Pollution Degree : 2
6. Overvoltage Category: II
7. Using Temperature Range:
   −40°C~+120°C

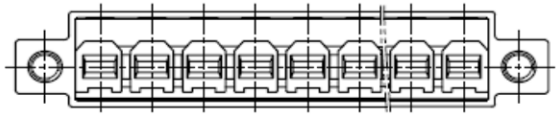

ITEM	NAME OF PART	MATERIAL	NOTES
6	SCREW	STEEL	M2/Zn Plated
5	LEVER	POM	ORANGE
4	S−CAGE	STAINLESS STEEL	
3	CLAMP	COPPER ALLOY	Tin Plated
2	COVER	PA66	UL94−V0 BLACK
1	HOUSING	PA66	UL94−V0 BLACK

Normal Geometric Tolerancing			
— //		⌯	⊥
0 to 100 0.2 over 100 to 150 0.3 over 150 0.5		0.3	0 to 10 0.2 over 10 0.3

Total Pitch Tolerances		Normal dimension Tolerances	
0<U<=30	±0.20	0~30	±0.25
30<U<=53	±0.25	over 30~53	±0.30
53<U<=70	±0.30	over 53~70	±0.35
70<U<=90	±0.35	over 70~90	±0.44
90<U<=115	±0.44	over 90~115	±0.55
115<U<=150	±0.55	over 115~150	±0.70

NOTES 2:

1. RoHS compliance
2. Strip length: 8~9mm

REV.	CONTENT	CHK.	DATE
0			

DWG.	LWF	DATE	14.05.29	UNITS	MM
CHK.		DATE		SCALE	3:1 (:)
APP.		DATE		NAME	
				DWG NO.	SP−03−02250600

SHEET/OF 1 / 1

DELTA COMPONENTS GmbH · Auweg 27 · D-79761 Waldshut-Tiengen · Tel.: +49/7751/8399-0 · Fax: +49/7751/8399-99
www.delta-components.de E-mail: info@delta-components.de

Appendix D: DC-IN Connector Specification

FILE 0225\0225-16XXTH

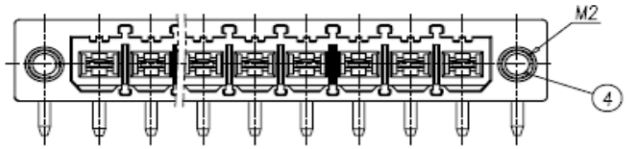

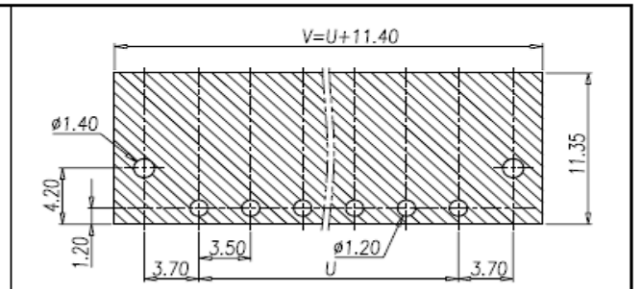

P.C.B. LAYOUT

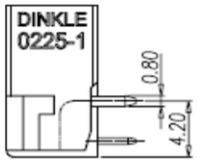

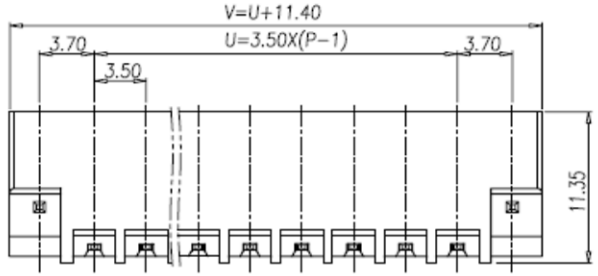

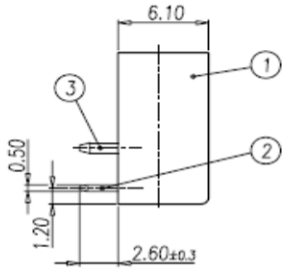

P	2	3	4	5	6	7	8	9
U	3.5	7.0	10.5	14.0	17.5	21.0	24.5	28.0
V	14.9	18.4	21.9	25.4	28.9	32.4	35.9	39.4
P	10	11	12	13	14	15	16	17
U	31.5	35.0	38.5	42.0	45.5	49.0	52.5	56.0
V	42.9	46.4	49.9	53.4	56.9	60.4	63.9	67.4
P	18	19	20	21	22	23	24	
U	59.5	63.0	66.5	70.0	73.5	77.0	80.5	
V	70.9	74.4	77.9	81.4	84.9	88.4	91.9	

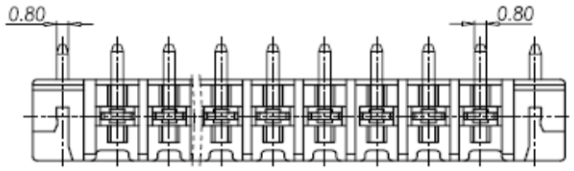

NOTES 1:

UL Standard :

1. Rating: 300V 8A
   PITCH: 3.50mm
2. Insulation Withstands Voltage:
   AC 2000V at 1 minute
3. Using Temperature Range:
   −40°C~+110°C

IEC Standard :

1. Rating: 630V 15A
2. Rate Impulse Voltage: 4000V
3. Insulation Resistance:
   500MΩ or more at DC500V

4. Material Group : I
5. Pollution Degree : 2
6. Overvoltage Category: II
7. Using Temperature Range:
   −40°C~+110°C

NOTES 2:

1. RoHS compliance
2. Through hole reflow soldering
   Temperature: 245°C

Normal Geometric Tolerancing					
—	//		⌯	⊥	
0 to 100	0.2	0.3	0 to 10	0.2
over 100 to 150	0.3		over 10	0.3
over 150	0.5			

Total Pitch Tolerances		Normal dimension Tolerances	
0<U<=30	±0.20	0~30	±0.25
30<U<=53	±0.25	over 30~53	±0.30
53<U<=70	±0.30	over 53~70	±0.35
70<U<=90	±0.35	over 70~90	±0.44
90<U<=115	±0.44	over 90~115	±0.55
115<U<=150	±0.55	over 115~150	±0.70

REV.	CONTENT	CHK.	DATE
0			

ITEM	NAME OF PART	MATERIAL	NOTES
4	NUT	STEEL	M2/Zn Plated
3	SOLDER PIN 2	COPPER ALLOY	Tin Plated
2	SOLDER PIN 1	COPPER ALLOY	Tin Plated
1	HOUSING	PA+GF	UL94-V0 BLACK

DWG.	LWF	DATE	14.05.29	UNITS	MM	SHEET/OF	1 / 1
CHK.		DATE		SCALE	3:1 (:)		
APP.		DATE					
				DWG NO.	SP-03-02251626		

DELTA COMPONENTS GmbH · Auweg 27 · D-79761 Waldshut-Tiengen · Tel.: +49/7751/8399-0 · Fax: +49/7751/8399-99
www.delta-components.de E-mail: info@delta-components.de

Appendix E: IO2 (GPIO) Mating Connector Specification

FILE 0156\0156-2AXX

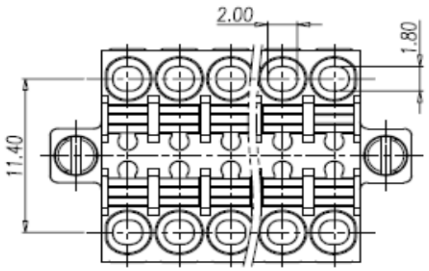

P	6	8	10	12	14	16	18	20	22
U	7.0	10.5	14.0	17.5	21.0	24.5	28.0	31.5	35.0
V	10.54	14.04	17.54	21.04	24.54	28.04	31.54	35.04	38.54
P	24	26	28	30	32	34	36	38	40
U	38.5	42.0	45.5	49.0	52.5	56.0	59.5	63.0	66.5
V	42.04	45.54	49.04	52.54	56.04	59.54	63.04	66.54	70.04

NOTES:

1. Rating: 150V 8A (UL)
   320V 10A (VDE)
   PITCH: 3.50mm
2. Insulation Withstands Voltage:
   AC 2000V at 1 minute
3. Insulation Resistance:
   500MΩ or more at DC500V
4. Using Temperature Range:
   −40℃ ~ +105℃
5. Suitable Electric Wire:
   UL: 28 ~ 16 AWG
   VDE: Rigid: 0.2~1.0mm²
   Flexibly: 0.2~1.5mm²
   Strip length: 7~8mm
6. RoHS compliance

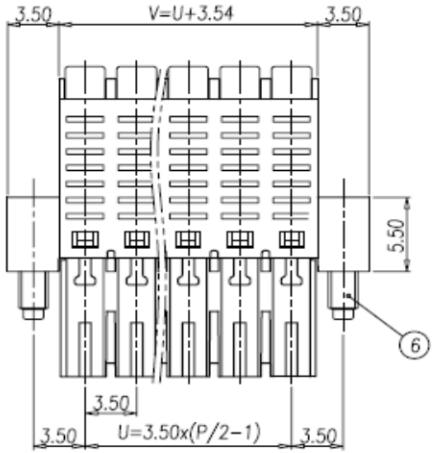

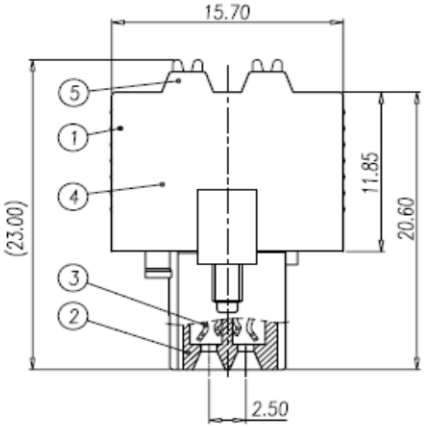

Normal Geometric Tolerancing			
— //		⌯ ⊥	
0 to 100	0.2	0.3	0 to 10 0.2
over 100 to 150	0.3		over 10 0.3
over 150	0.5		
Total Pitch Tolerances		Normal dimension Tolerances	
0<U<=30	±0.20	0~30	±0.25
30<U<=53	±0.25	over 30~53	±0.30
53<U<=70	±0.30	over 53~70	±0.35
70<U<=90	±0.35	over 70~90	±0.44
90<U<=115	±0.44	over 90~115	±0.55
115<U<=150	±0.55	over 115~150	±0.70

ITEM	NAME OF PART	MATERIAL	NOTES
6	SCREW	STEEL	M2/Zn Plated
5	LEVER	POM	ORANGE
4	WIRE CAGE	STEEL	
3	CLAMP	COPPER ALLOY	Tin Plated
2	COVER	PA66	UL94-V0 GREEN
1	HOUSING	PA66	UL94-V0 GREEN

DWG.	LWF	DATE	13.05.02	UNITS	MM SHEET/OF 1 / 1
CHK.		DATE		SCALE	3:1 (:)
APP.		DATE		NAME	
REV.	CONTENT	CHK.	DATE	DWG NO.	SP-03-01562AXX

DELTA COMPONENTS GmbH · Auweg 27 · D-79761 Waldshut-Tiengen · Tel.: +49/7751/8399-0 · Fax: +49/7751/8399-99
www.delta-components.de E-mail: info@delta-components.de

Appendix F: IO2 (GPIO) Connector Specification

FILE 0156\0156-28XX

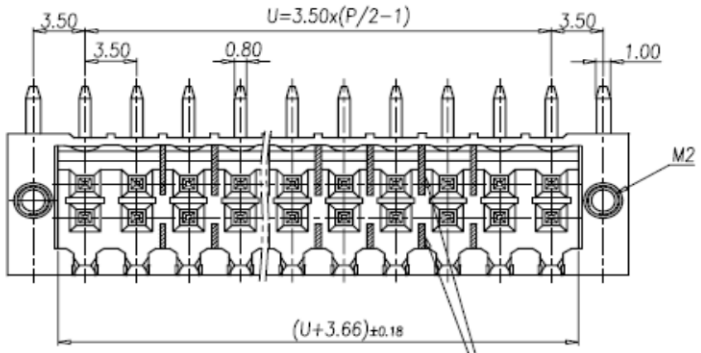

NOTES:

1. Rating: 150V 8A (UL)
   320V 10A (VDE)
   PITCH: 3.50mm
2. Insulation Withstands Voltage:
   AC 2000V at 1 minute
3. Insulation Resistance:
   500MΩ or more at DC500V
4. Using Temperature Range:
   −40℃ ~ +105℃
5. RoHS compliance

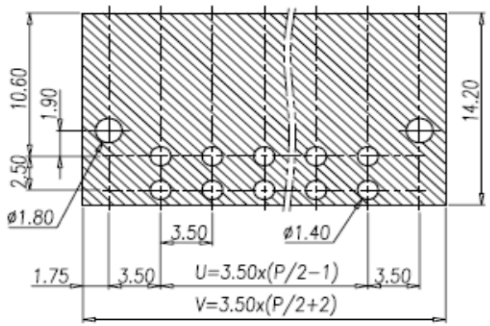

P.C.B. LAYOUT

羽影肋的数量表

P	6	8	10	12	14	16	18	20	22
肋数量	6•18P之间都有肋							7	8
P	24	26	28	30	32	34	36	38	40
肋数量	7	8	7	8	7	8	9	10	11

P	6	8	10	12	14	16	18	20	22
U	7.0	10.5	14.0	17.5	21.0	24.5	28.0	31.5	35.0
V	17.5	21.0	24.5	28.0	31.5	35.0	38.5	42.0	45.5
P	24	26	28	30	32	34	36	38	40
U	38.5	42.0	45.5	49.0	52.5	56.0	59.5	63.0	66.5
V	49.0	52.5	56.0	59.5	63.0	66.5	70.0	73.5	77.0

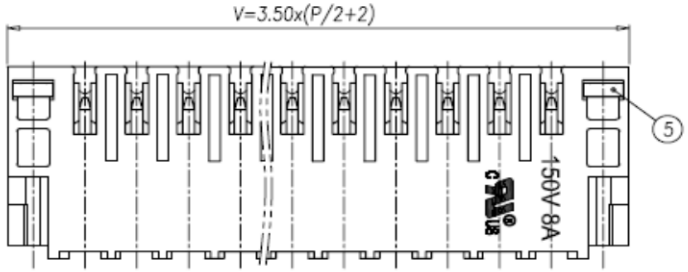

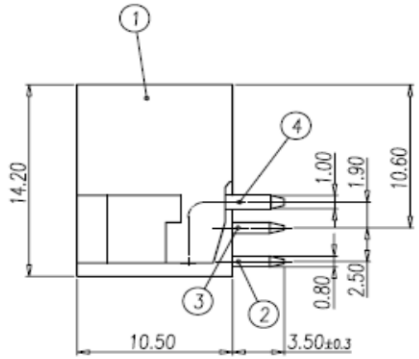

Normal Geometric Tolerancing					
—	//	⌯		⊥	
0 to 100	0.2	0.3	0 to 10	0.2	
over 100 to 150	0.3		over 10	0.3	
over 150	0.5				

Total Pitch Tolerances		Normal dimension Tolerances	
0<U<=30	±0.20	0~30	±0.25
30<U<=53	±0.25	over 30~53	±0.30
53<U<=70	±0.30	over 53~70	±0.35
70<U<=90	±0.35	over 70~90	±0.44
90<U<=115	±0.44	over 90~115	±0.55
115<U<=150	±0.55	over 115~150	±0.70

ITEM	NAME OF PART	MATERIAL	NOTES
5	NUT	STEEL	M2/Zn Plated
4	SOLDER PIN 3	COPPER ALLOY	Tin Plated
3	SOLDER PIN 2	COPPER ALLOY	Tin Plated
2	SOLDER PIN 1	COPPER ALLOY	Tin Plated
1	HOUSING	PA66(G30)	UL94-V0 GREEN

DWG.	LWF	DATE	13.10.16	UNITS	MM
CHK.		DATE		SCALE	3:1 (:)
APP.		DATE		NAME	
				DWG NO.	SP-03-01562800

SHEET/OF 1/1

REV.	CONTENT	CHK.	DATE
5			

DELTA COMPONENTS GmbH · Auweg 27 · D-79761 Waldshut-Tiengen · Tel.: +49/7751/8399-0 · Fax: +49/7751/8399-99
www.delta-components.de E-mail: info@delta-components.de